

TENGYUN TECHNOLOGY

Product Catalogue

2026-1 | TENGYUN CATALOGUE



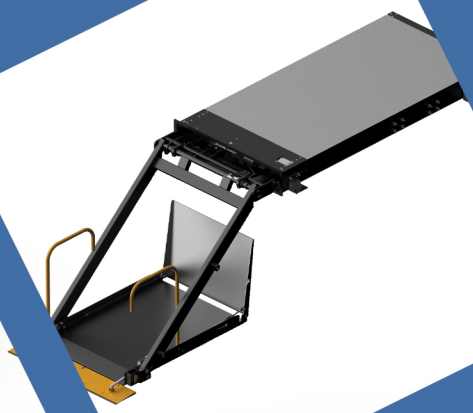





www.tengyun-mobility.com

Smart Mobility, Accessible Safety







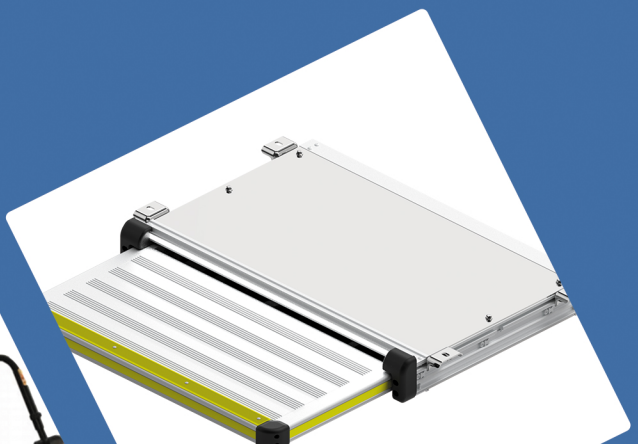



Catalogue

01 Accessible Seats

Manual Swivel Seats....07
Lift and Swivel Seats-Long Slide Rail Type....09
Lift and Swivel Seats-Base Type....11
Detachable Lift and Swivel Seats-Hydraulic Cantilever Type....13
Manual Transfer Wheelchair....15
List of seat options....17

02 Wheelchair Lifts

Cantilever Wheelchair Lifts-Telescopic Type....21
Cantilever Wheelchair Lifts-Split Type....23
Cassette Wheelchair Lifts....25
Step Wheelchair Lifts....27
Cassette Wheelchair Lifts- Mini Type....29

03 Wheelchair Ramps

Power Access Ramps-Telescopic and Fold Integrated Type....35
Power Access Ramps-Two Stage Telescopic Type....37
Manual Access Ramps-Fold Type....39
Manual Access Ramps-Multiple Fold Type....41

04 Wheelchair Aids

Wheelchair Restraint System....45
Wheelchair Winch....47
Wheelchair Roof Top Box....49
Wheelchair Hoist....51

05 Driving Aids

Seat Side Panel....55
Hand Control For Accelerator And Brake....57

06 Steps

Electric Steps....61

07 Medical Aids

Occupancy Seat sensor pad And Wet Sensor pad....65
Patient Transfer Lift....66

ABOUT US

Changzhou Tengyuan Technology Co., Ltd. was established on December 26, 2023, focusing on the research and development, production, and sales of in-vehicle barrier-free assistive travel equipment. Our main products include accessible seats, wheelchair lifts, and assisted driving products for people with disabilities. We provide full chain solutions for customers with limited mobility both domestically and internationally, serving car companies, modification factories, and individual/group end-users. The team gathers industry elites, builds a governance model adapted to the capital market with professional strength and mature management experience, and actively seizes the opportunity of the growth in demand for barrier-free travel equipment.

Corporate Positioning

Focusing on the research and production of in-vehicle barrier-free devices, providing a full range of solutions, serving car companies, modification factories, and end users, and assisting in safe and convenient travel.

Core Highlights

- Full range of products, covering all scenarios of boarding, fixing, and driving, providing one-stop solutions to meet diverse needs.
- Robust technology: Elite team overcomes industry pain points, obtains multiple patents, and leads the industry in quality.
- Excellent reputation: Serving domestic and foreign customers, winning wide market recognition with high cost-effectiveness.



Core Values

- Innovation-driven: Taking user needs as the core, breaking through technological bottlenecks, and creating differentiated products.
- Putting people first: Respecting the unique needs of users and endowing technology with humanistic care through design.
- Quality first: Strictly controlling safety and reliability, and establishing industry benchmarks with high standards.
- Win-win cooperation: Working together with partners to promote the development of barrier-free travel ecology.
- Social responsibility: Fulfill social responsibilities, help vulnerable groups integrate into society.

Business Philosophy: "Good quality, good price, good choice

- Good quality: Relying on patented technology, we create reliable products that can withstand market scrutiny.
- Good price: Large-scale production+lean management, allowing high-quality products to benefit more users.
- Good choice: A one-stop solution that meets the diverse needs of travel scenarios.

Business Direction

Focusing on private users and modification of multiple vehicles, we provide exclusive solutions for commercial vehicles, large SUVs, and off-road vehicles, focusing on private users and modification of multiple vehicles, domestically and internationally.

Technology and Safety

Relying on independent R&D, deeply integrating independent production patents, taking customers' real needs as the core, continuously polishing product details, and creating highly integrated exclusive solutions. The product has passed international-level 3C mandatory certification, ECE certification, international ISO quality system certification, and other strict technical certifications. The whole process from technology research and development to production implementation strictly controls the reliability and safety of each product in all aspects, and building a solid travel safety defense line for users.

Market recognition

Through high-quality products and perfect after-sales service, we have won wide recognition in domestic and international modification vehicle markets, firmly occupying a dominant position in the industry.

Official information:
•Website:www.tengyun-mobility.com
•Slogan:Smart Molibity,Accessible Safety



TENGYUN TECHNOLOGY

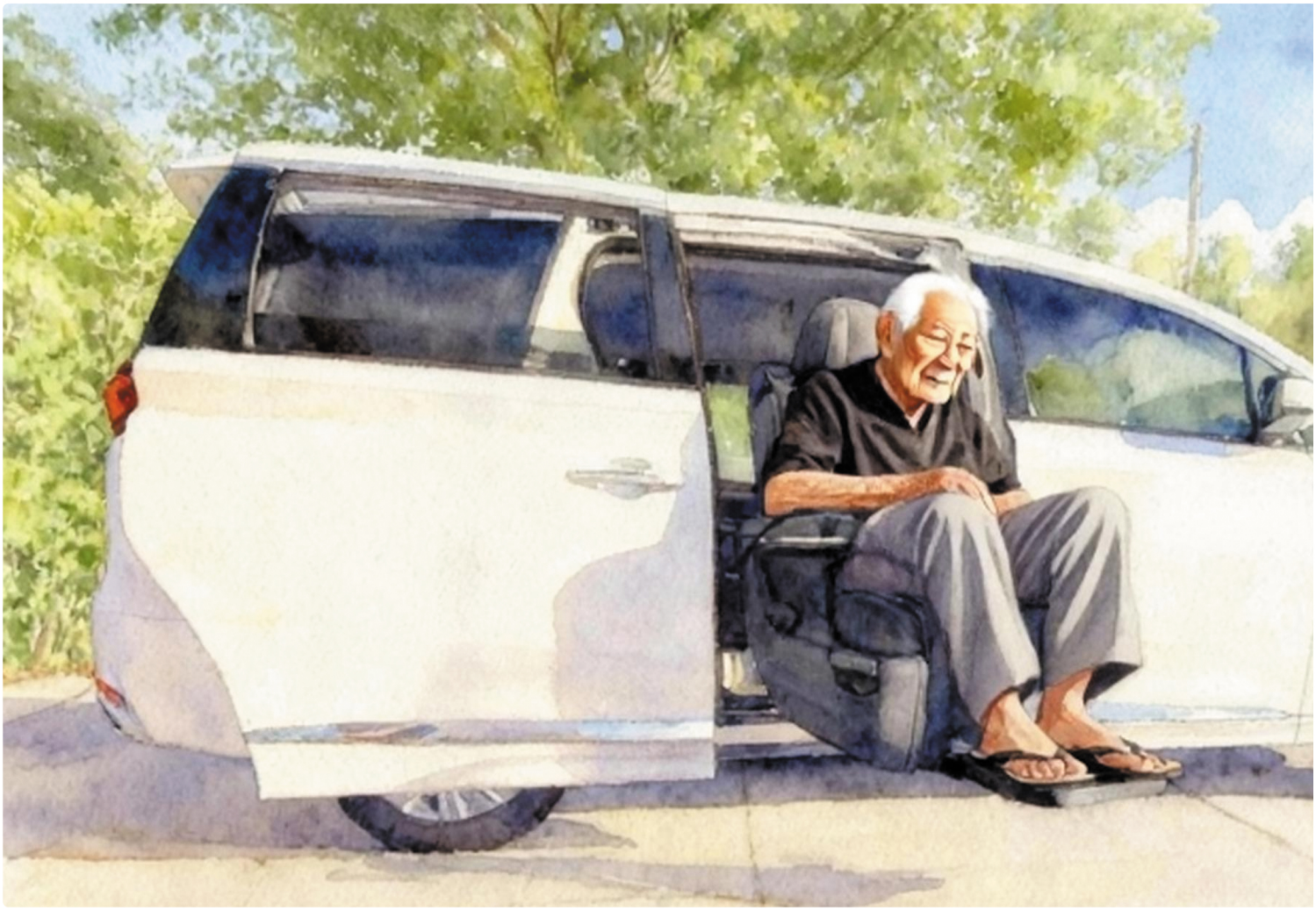

The first category | Accessible Seats



Accessible Seats

Accessible Seats

Manual Swivel Seats

Designed for people who struggle to enter vehicles or transfer from wheelchairs. Ideal for sedans or tight-space vehicles. Installed as a base unit between the vehicle floor and seat, it enables the car seat to be rotated facing outwards.—with an extra perk: this swivel base shifts slightly outward for easier entry/exit. Once the passenger sits on the seat outside, simple manual operation rotates it back to its original in-car position.

Available in left-swivel and right-swivel models.





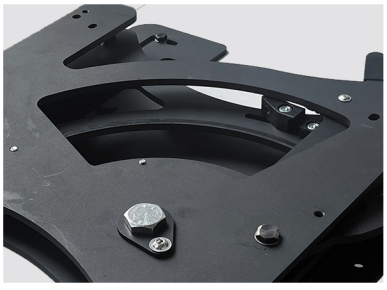

Features:

- Complies with 2006/42/EC,GB14167 and GB15083 standard requirements;
- Entry-level swivel seat;
- Minimal seat height increase after installation;
- Light overall weight;
- Manual operation, convenient and smooth;
- Simple structure, safe and highly reliable;
- Spray-painted surface for excellent corrosion resistance;
- Supports original seat modification;
- Fits most vehicle models on the market;

Technical Parameters:

- load capacity: 180kg;
- Swivel range: 0~97°;
- Product Weight: 23kg;

Front View



3D View

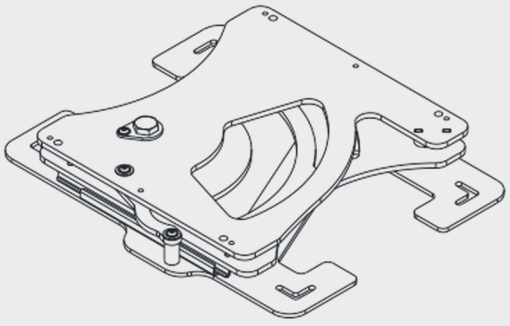

Top View

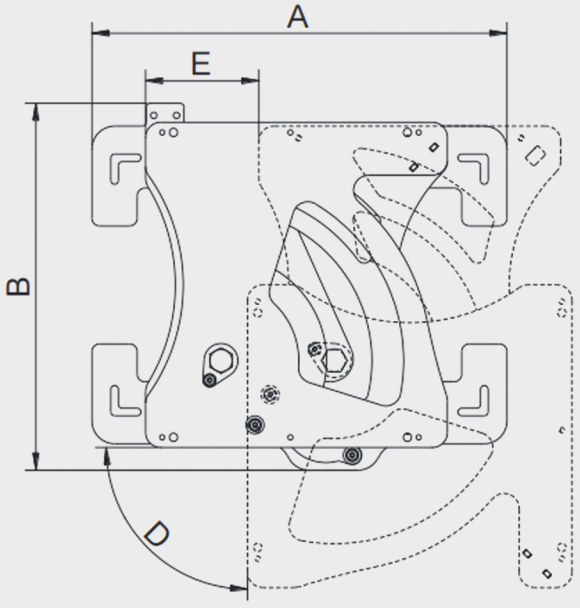

Model	Unit: mm	Length A	Width B	Installed height C	Swivel range D	Lengthwise movement E	Installation in vechicle
S3MR		550	485	67	0~97°	150	Right
S3ML		550	485	67	0~97°	150	Left

Accessible Seats

Lift and Swivel Seats-Long Slide Rail Type

Features a unique long slide rail design, with its bottom translation mechanism cleverly placed in the original seat rails, greatly reducing the seat height of the mobility chair after installation. Suitable for SUV, MPV, commercial vehicles, etc. The seat mechanism can rotate outward, allowing users with mobility difficulties to get on and off smoothly. Once extended outside the vehicle, the seat height from the ground can be adjusted according to the user's actual needs. It can be used with a wheelchair docking mechanism, enabling wheelchair users to slide directly onto the lifting and rotating seat for getting on and off.

Available in left-swivel and right-swivel models.



Features:

- Complies with ECE R10,ECE R14,ECE R17,GB14167,GB15083 standard requirements;
- Aluminum slide rails replace original seat rails; seat height is over 30mm lower than traditional base-type mobility chairs after installation;
- Lightweight product design;
- Automotive-grade control system;
- Equipped with seat ventilation, heating and powered backrest;
- Equipped with door interlock function;
- APP/handheld switch control function;
- Supports original seat modification and original seat belt docking;
- Equipped with emergency manual function;
- Programmable seat movement trajectory;Sleep function;
- CAN communication function;
- Spray-painted surface for excellent corrosion resistance;
- Supports original seat modification;





Technical Parameters:

- Power supply: 12Vdc;
- Rated power: 120W;
- Product weight: 65kg (excluding bottom slide rails);
- Load capacity: 180kg;
- Maximum vertical travel: 390mm;
- Swivel range: 0~100°;

PATENTED PROCUCT
CE MARKED
CRASH TEST APPROVED
CYCLE TEST APPROVED
CLIMATED TEST APPROVED
EMC TEST APPROVED

Front View

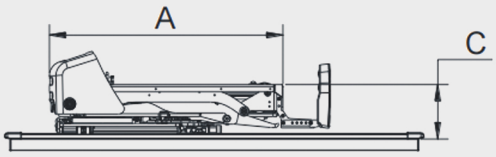

Side View

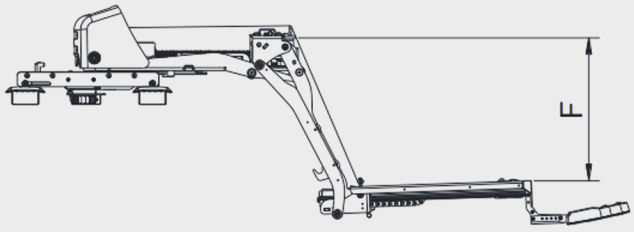

Top View

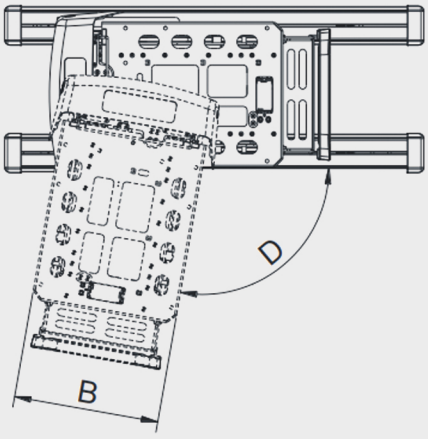

3D View

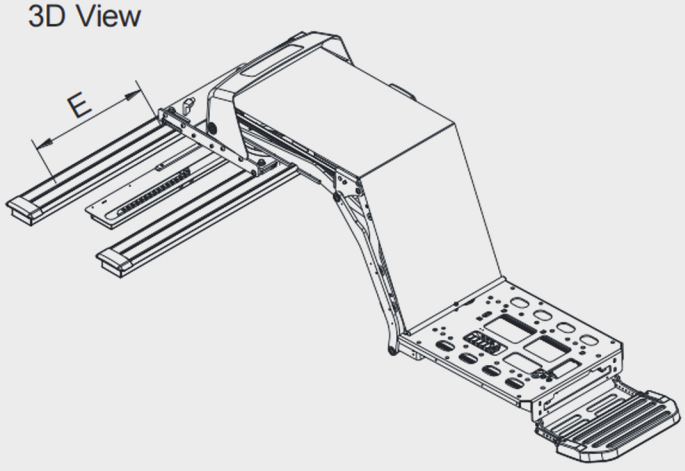

Model Unit: mm	Length A	Width B	Installed height C	Swivel range D	Lengthwise movement E	Vertical travel F	Installation in vechicle
S5AR-390	643	400	150	0~100°	Adapt to vehicles	390	Right
S5AL-390	643	400	150	0~100°	Adapt to vehicles	390	Left

Accessible Seats

Lift and Swivel Seats-Base Type

This product is primarily designed for SUV, MPV, commercial vehicles and other models. Its seat mechanism can rotate and extend outside the vehicle, enabling users with mobility impairments to board and alight smoothly. Once the seat extends outside, its height from the ground can be adjusted to meet users' actual needs. The product is compatible with wheelchair docking mechanisms, allowing wheelchair users to directly transfer onto the lifting and rotating seat via the docking structure for boarding and alighting.

Available in left-swivel and right-swivel models.



Features:

- Complies with ECE R10,ECE R14,ECE R17,GB14167,GB15083 standard requirements;
- Optimized reduction of seat installation height;
- Shorter overall length of the mechanism, facilitating greater legroom after original seat modification;
- Pedal position adjustable for installation based on original seat modification requirements;
- Lightweight product design;
- Automotive-grade control system;
- Equipped with seat ventilation, heating and powered backrest;
- Equipped with door interlock function;
- APP/handheld switch control function;
- Supports original seat modification and original seat belt docking;
- Equipped with emergency manual function;
- Programmable seat movement trajectory;Sleep function;
- CAN communication function;
- Spray-painted surface for excellent corrosion resistance;
- Electrophoretic surface treatment for excellent corrosion resistance;
- Supports original seat modification;





Technical Parameters:

- Power supply:12Vdc;
- Rated power:120W;
- Product weight:78kg;
- Load capacity:180kg;
- Maximum vertical travel:390mm;
- Swivel range:0~113°;

PATENTED PROCUCT
CE MARKED
CRASH TEST APPROVED
CYCLE TEST APPROVED
CLIMATED TEST APPROVED
EMC TEST APPROVED

Lift and Swivel Seats-Base Type

Dimensions and models

Front View

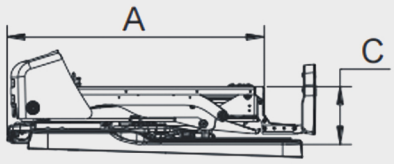

Side View

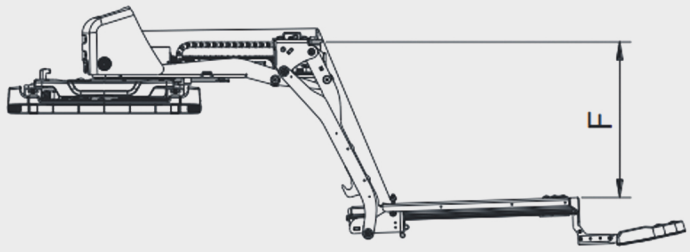

Top View

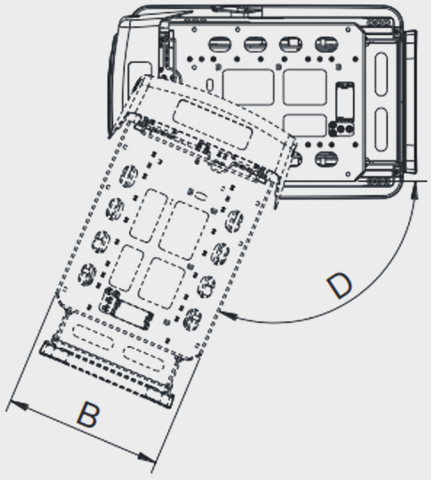

3D View

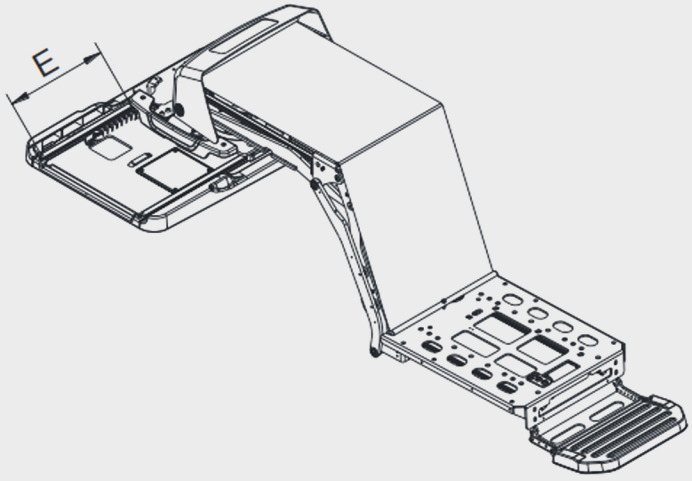

Model Unit: mm	Length A	Width B	Height C	Swivel range D	Lengthwise movement E	Vertical travel F	Installation in vechicle
S5BR-390	652	400	151	0~113°	360	390	Right
S5BL-390	652	400	151	0~113°	360	390	Left

Accessible Seats

Detachable Lift and Swivel Seats-Hydraulic Cantilever Type

Designed specifically for people with special needs, this product is tailored for commercial vehicles. Its mobility seat features automatic lifting via a hydraulic mechanism. Press the remote control buttons to activate the hydraulic lifting and rotating system, extending the seat outside the vehicle. Once separated from the mechanism, the seat converts directly into a manually pushable wheelchair—effectively solving the boarding/alighting challenge for users with mobility impairments.

Available in left-swivel and right-swivel models



Features:

•Adjustable headrest and armrest height;
•Genuine leather seat;
•Injection-molded sponge;
•Backrest reclinable to 180° flat;
•Honeycomb rubber shock-absorbing tires;
•Disc brakes;
•Equipped with door interlock function;
•Equipped with emergency manual function;
•Programmable seat movement trajectory;
•Spray-painted product surface for excellent corrosion resistance.
•Spray-painted surface for excellent corrosion resistance;

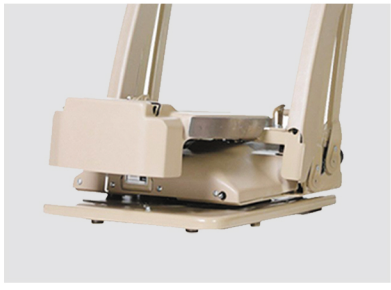



Technical Parameters:

•Power supply:12Vdc;
•Rated power: 500W;
•Load capacity:150kg;
•Maximum vertical travel: 550mm;
•Swivel range: 0~105°;
•Rear wheel size: 12 inches;

CE MARKED
EMC TEST APPROVED
CYCLE TEST APPROVED
CLIMATED TEST APPROVED

Front View

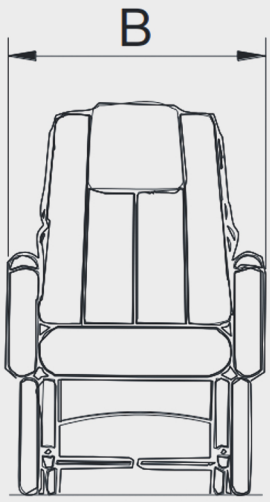

Side View

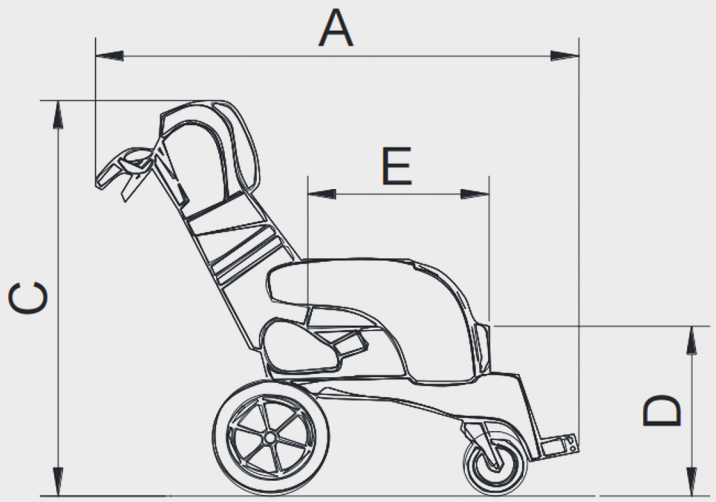

Model	Unit: mm	Wheelchair length A	Wheelchair width B	Wheelchair height C	Seat height D	Seat depth E
S7AR		1300	670	1150	430	500
S7AL		1300	670	1150	430	500

Accessible Seats

Manual Transfer Wheelchair

This product is used in conjunction with S3M, S5A-390, and S5B-390.The wheelchair serves as a transfer mechanism between the vehicle seat assembly and the wheelchair base, designed to convert the in-vehicle seat into a wheelchair seat.
After the caregiver moves the passenger (seated on the in-vehicle seat) out of the vehicle, they push the seat (with the passenger) into the wheelchair base. The in-vehicle seat then slides easily into the base, becoming a standard wheelchair—allowing the passenger to remain comfortably seated throughout for barrier-free alighting.
Reversing this operation enables entry into the vehicle.







Features:

- Baked paint finish for excellent corrosion resistance;
- Adjustable seat height;
- Anti-tipping function;
- Quick-release rims;
- Detachable footrests, brakes and anti-tipping brackets for easy storage in tight spaces;

Technical Parameters:

- Rim size: 12 inches / 24 inches;
- Load capacity:150kg;
- Weight of 12-inch manual transfer wheelchair: 17kg;
- Weight of 24-inch manual transfer wheelchair: 26kg;

Front View

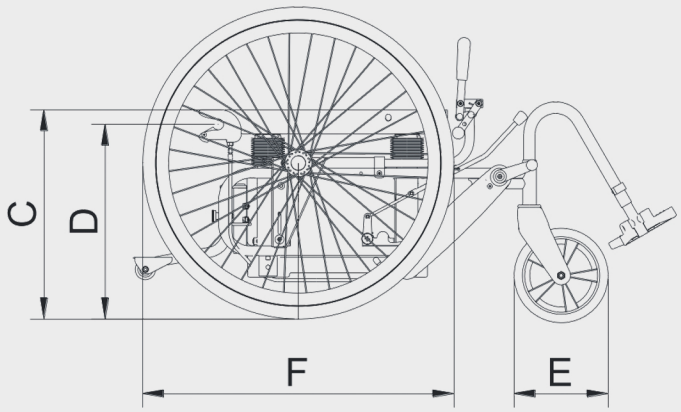

Top View

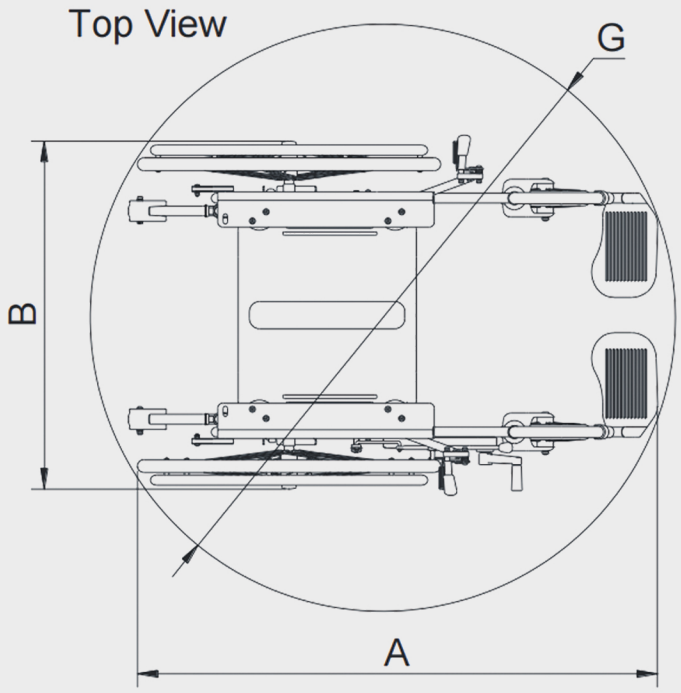

Model Unit: mm	Length A	Width B	Wheelchair height C	Docking height D	Front wheel diameter E	Rear wheel diameter F	Turning radius G
S7BM-12"	870	680	400-510	370-480	7"	12"	1020
S7BM-24"	1020	680	400-510	370-480	7"	24"	1140

Seat Options List

	
Beige electric seat (with armrests)	Black electric seat (with armrest)
	
Beige electric seat	Black electric seat
	
Black small seat	Black small seat (with armrests)

TENGYUN TECHNOLOGY



The second category | Wheelchair Lifts

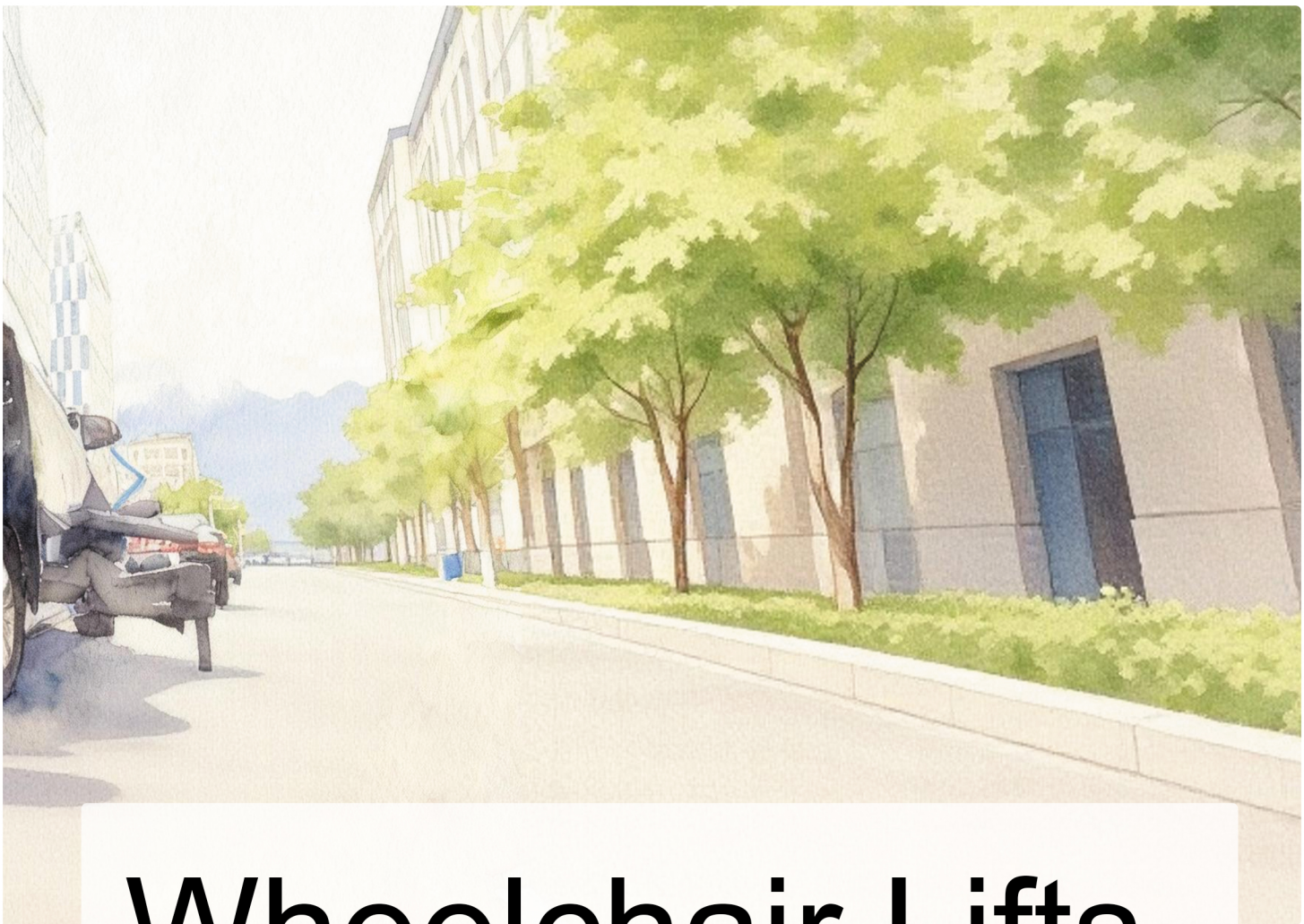

Wheelchair Lifts

www.tengyun-mobility.com

Wheelchair Lifts

Cantilever Wheelchair Lifts-Telescopic Type

This product is mainly installed on commercial vehicles' side or tail doors. Its drawer-type storage platform design ensures good visibility for both passengers and drivers. The elevator, with a smaller total thickness, fits more vehicle models. Fully automatic hydraulic-driven, it can be controlled via a handheld switch for lifting, lowering and flipping.







Features:

- Complies with 2006/42/EC,2014/30/EU, ECE R10, EN1756-2, GB13094 standard requirements;
- Drawer style storage platform, unobstructed rear view;
- Reduced total thickness of the lifter, adaptable to more vehicle models for installation;
- Anti-slip platform;
- Continuous buzzer alert during equipment operation;
- Handheld switch control function;
- Equipped with emergency manual function;
- Fully automatic hydraulic drive ensuring stable mechanism operation;
- Automatic mechanical front and rear baffles;
- Product surface with plastic spraying treatment, excellent corrosion resistance;

Technical Parameters:

- Power supply:12/24Vdc;
- Rated power:500W;
- Load capacity: 400kg;
- Optional configurations: Bluetooth remote control and app operation (iOS, Android);

Cantilever Wheelchair Lifts-Telescopic Type

Dimensions and models

PATENTED PROCUCT
CE MARKED
EMC TEST APPROVED
CYCLE TEST APPROVED
CLIMATED TEST APPROVED

Front View

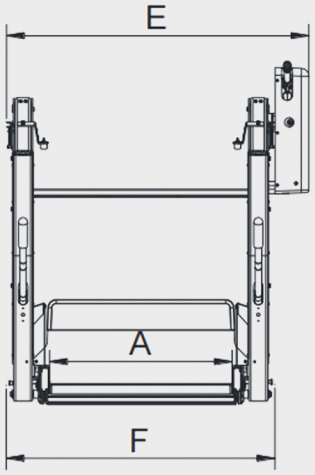

Side View

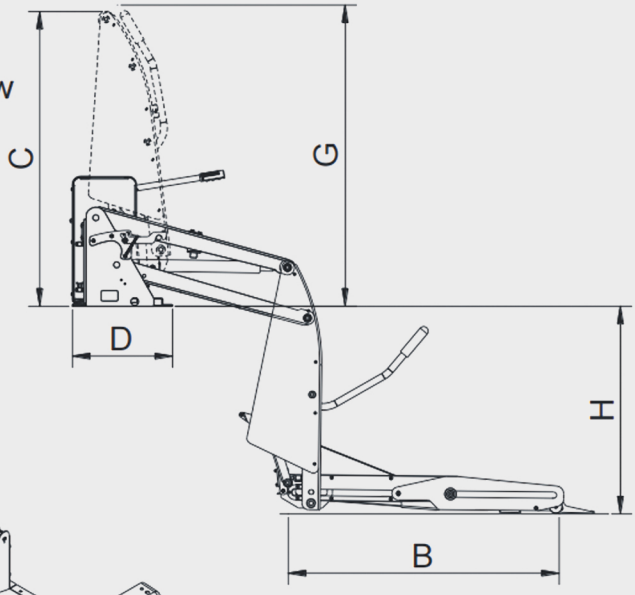

3D View

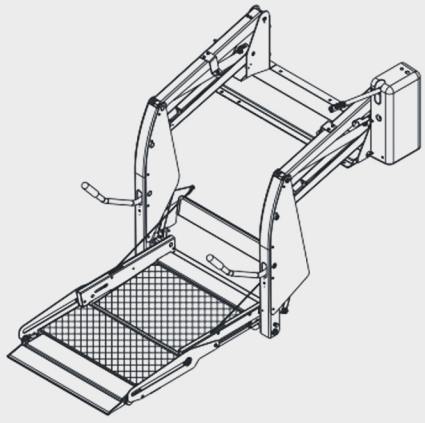

Model Unit: mm	Clear platform width A	Clear platform length B	Overall lift height C	Overall depth D	Overall lift width E	Min clear door opening width F	Min clear door opening height G	Max floor to ground H	Pump side (seen from outside)	Unit weight
L3A-700×1040	700	1040	1130	385	1160	1030	1140	900	L/R	140kg
L3A-750×1200	750	1200	1130	385	1210	1080	1140	900	L/R	145kg
L3A-800×1300	800	1300	1130	385	1260	1130	1140	900	L/R	156kg

Wheelchair Lifts

Cantilever Wheelchair Lifts-Split Type

This product is mainly installed on the side or rear doors of commercial vehicles and school buses. Its split-type platform stows parallel to the vehicle side, ensuring unobstructed visibility while maintaining access to passageways and emergency exits. The elevator features a unique threshold-free design from the platform to the vehicle floor, completely eliminating the risk of tripping in exit pathways. With a reduced overall thickness, the elevator is compatible with more vehicle models for installation. Driven by a fully automatic hydraulic system, it can be controlled via a handheld switch for lifting, lowering and flipping.



Features:

- Complies with 2006/42/EC,2014/30/EU, ECE R10,EN1756-2,GB13094 standard requirements;
- Split-type stowage platform, ensuring unobstructed visibility and maintaining access to passageways and emergency exits;
- Unique threshold-free design, completely eliminating the risk of tripping in exit pathways;
- Reduced total thickness of the lifter, adaptable to more vehicle models for installation;
- Anti-slip platform;
- Continuous buzzer alert during equipment operation;
- Handheld switch control function;
- Equipped with emergency manual function;
- Fully automatic hydraulic drive ensuring stable mechanism operation;
- Automatic mechanical front and rear baffles;
- Product surface with plastic spraying treatment, excellent corrosion resistance;

Technical Parameters:

- Power supply:12/24Vdc;
- Rated power:500W;
- Load capacity: 400kg;
- Optional configurations: Bluetooth remote control and app operation (iOS, Android);

PATENTED PROCUCT

CE MARKED

EMC TEST APPROVED

CYCLE TEST APPROVED

CLIMATED TEST APPROVED

Cantilever Wheelchair Lifts-Split Type

Dimensions and models

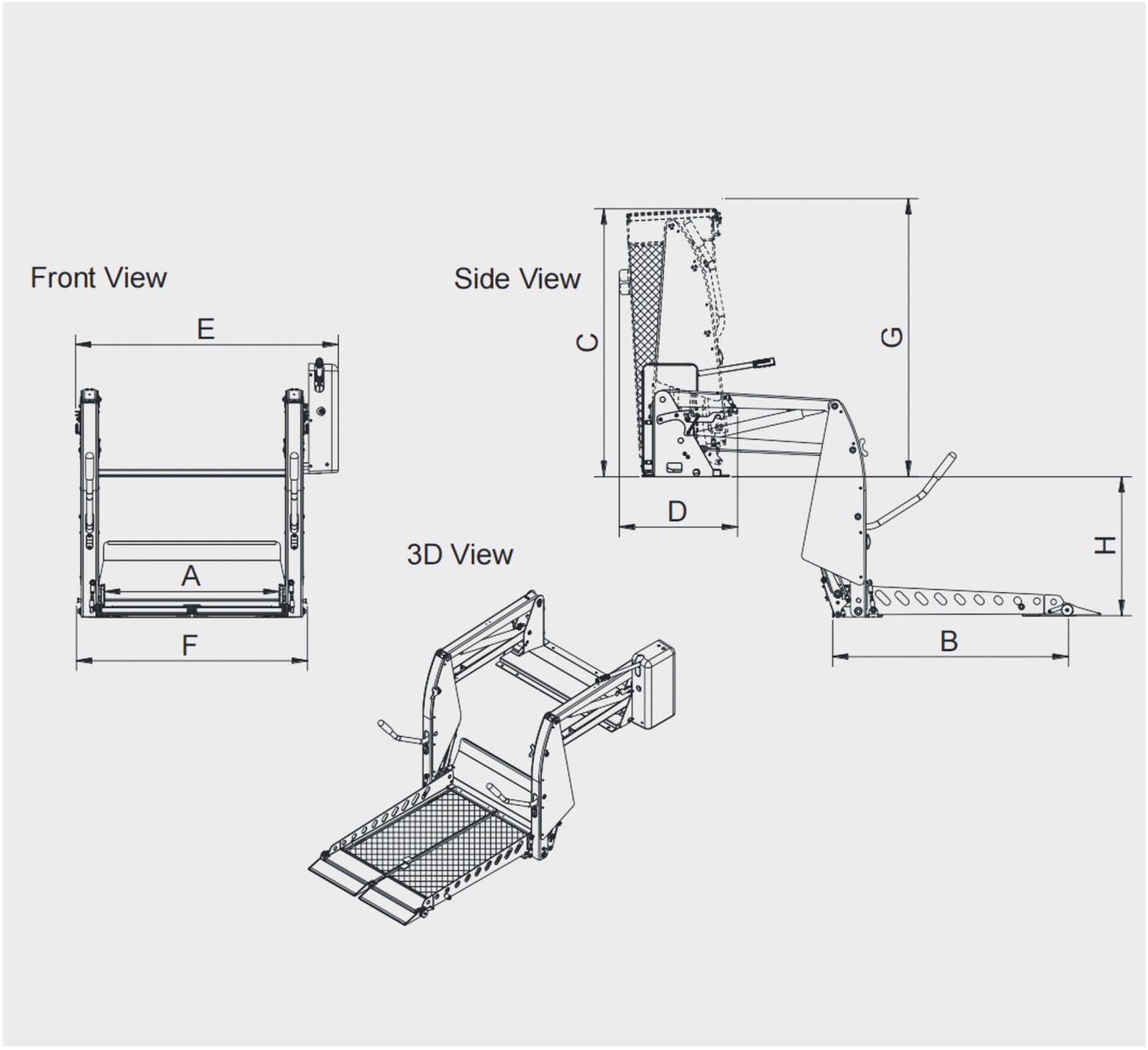

Model Unit: mm	Clear platform width A	Clear platform length B	Overall lift height C	Overall depth D	Overall lift width E	Min clear door opening width F	Min clear door opening height G	Max floor to ground H	Pump side (seen from outside)	Unit weight
L3B-770×1040	770	1040	1175	520	1160	1030	1220	900	L/R	142kg
L3B-820×1200	820	1200	1335	555	1210	1080	1380	900	L/R	152kg
L3B-870×1300	870	1300	1435	585	1260	1130	1480	900	L/R	159kg

Wheelchair Lifts

Cassette Wheelchair Lifts

This product is mainly installed in the steps of high-floor buses or city buses. It helps wheelchair users get on and off, without taking up interior space or affecting other passengers' normal boarding/alighting. The mechanism has light and buzzer alarms during operation; if the vehicle has insufficient power or electrical faults, it can be retracted via manual emergency function, ensuring normal vehicle operation.

Equipped with an anti-slip platform, safety handrails, automatic front baffle and mechanical rear baffle, it ensures wheelchair users' safety during platform lifting/lowering.

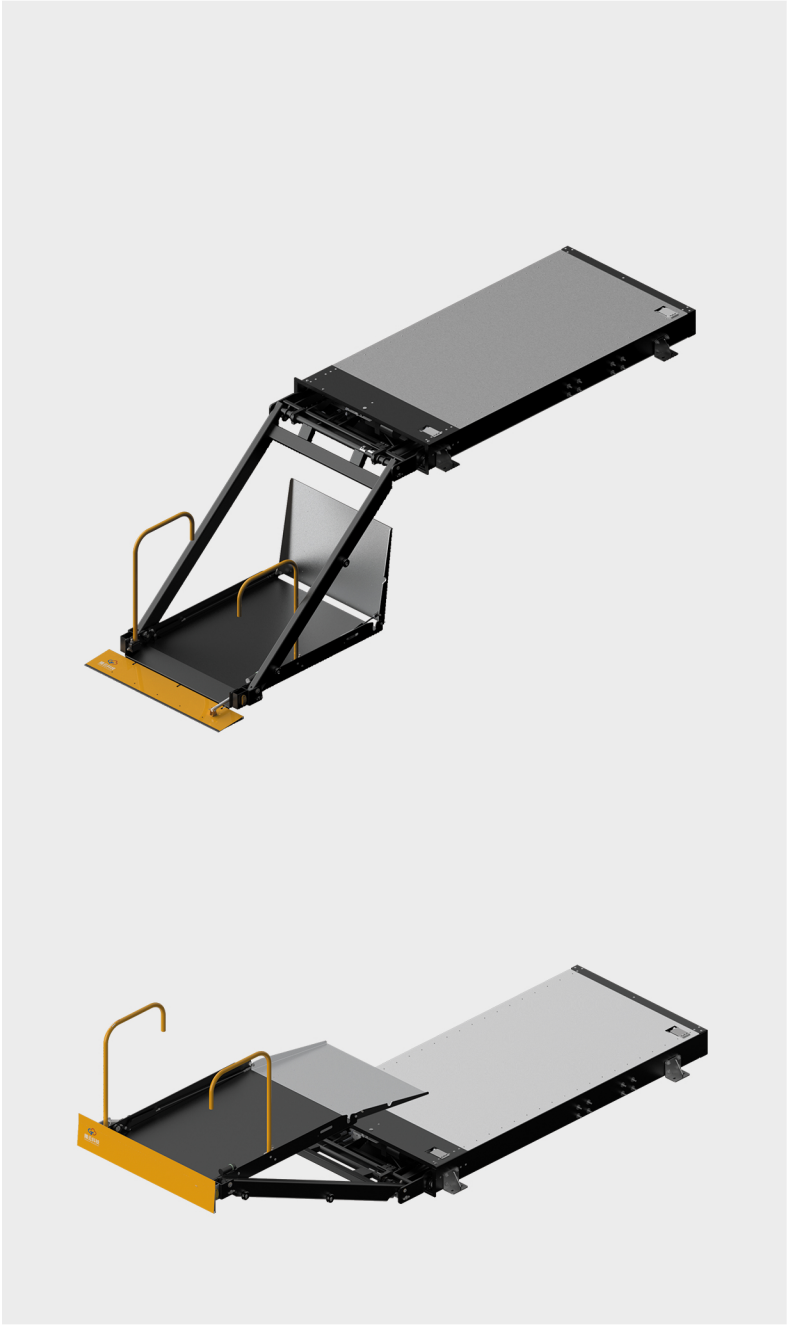

Features:

- Complies with 2006/42/EC,2014/30/EU, ECE R10, EN1756-2, GB13094 standard requirements
- Does not occupy interior vehicle space;
- Anti-slip platform;
- Equipped with a safety locking mechanism to prevent the mechanism from being thrown out when the vehicle makes sharp turns;
- Continuous buzzer alert during equipment operation;
- Equipped with emergency manual function;
- Vehicle interlock function;
- Fully automatic hydraulic drive ensuring stable mechanism operation;
- Automatic mechanical front and rear baffles; Product surface with plastic spraying treatment, excellent corrosion resistance;

Technical Parameters:

- Power supply:12/24Vdc;
- Rated power:800W;
- Load capacity:350kg;

CE MARKED

EMC TEST APPROVED

CYCLE TEST APPROVED

CLIMATED TEST APPROVED

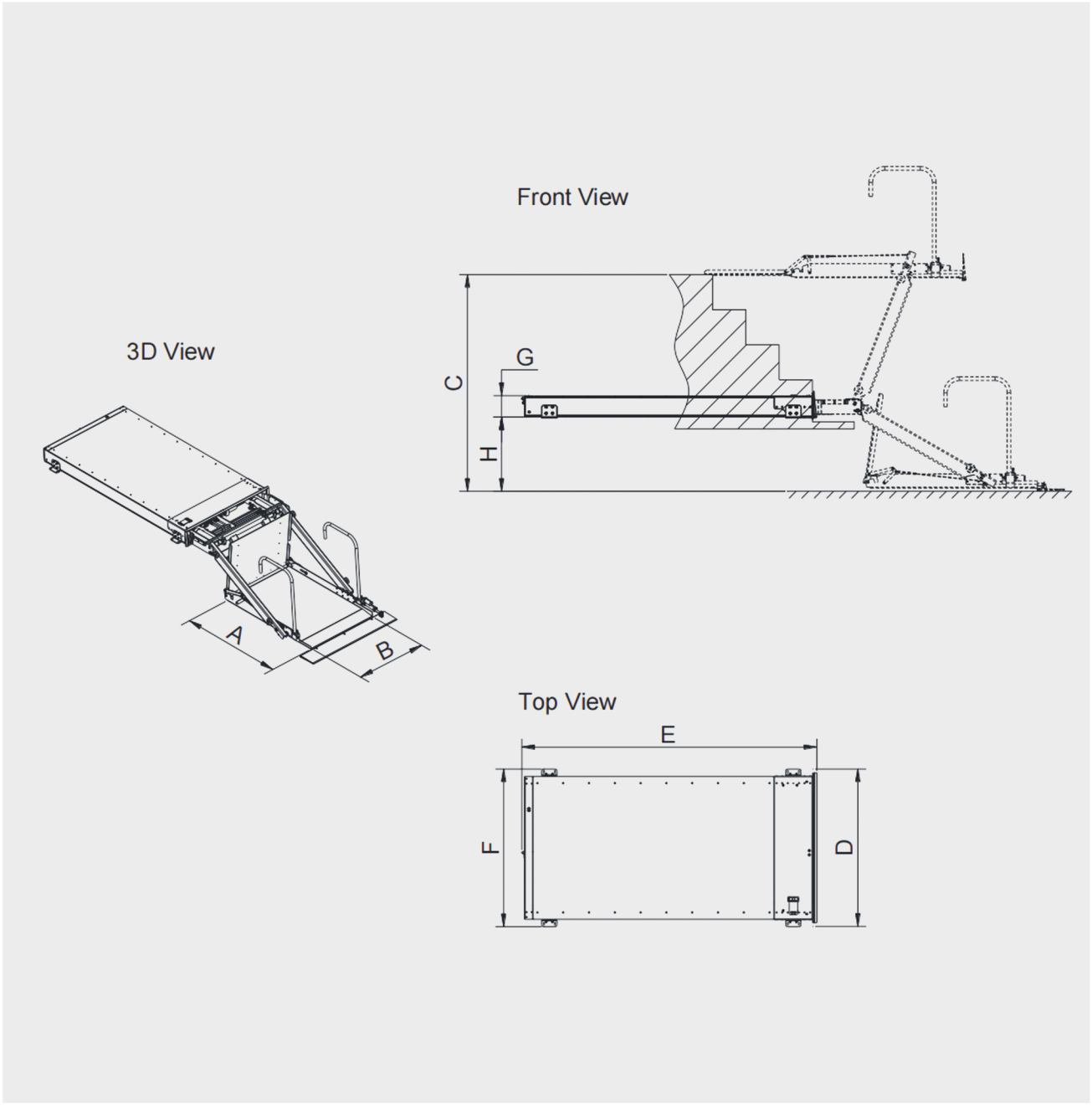

Model	Unit: mm	A	B	C	D	E	F	G	H
		Clear platform length	Clear platform width	Max floor to ground	Min clear door opening width	Cassette length	Cassette width	Cassette height	Max travel down
L5A-1200×750		1200	750	1545	1045	2075	1105	156	440

Wheelchair Lifts

Step Wheelchair Lifts

This product is mainly installed at the middle or rear door of a vehicle. With a vehicle-matching design, it can serve as a vehicle step in daily use (no need to make a step at this door), without affecting passengers' normal boarding/alighting or taking up interior space. Handrails are equipped on both sides of the uprights, and the passenger-carrying platform has an anti-slip function, fully ensuring passengers' safety during the elevator's operation.
This model features a fully automatic operation mode, with both platform extension/retraction and front baffle operation fully automated. The lifting action is hydraulically driven, controlled via a standard handheld switch, ensuring stable, safe and reliable overall operation.



Features:

- Complies with 2006/42/EC,2014/30/EU, ECE R10, EN1756-2, GB13094 standard requirements;
- New baffle structures added to both sides of the front and rear platforms, It ensures enhanced protection for user safety;
- Platform locking mechanisms added to both sides of the uprights to eliminate vibration and abnormal noise;
- Anti-slip platform;
- Continuous buzzer alert during equipment operation;
- Vehicle interlock function;
- Equipped with emergency manual function;
- Product surface with plastic spraying treatment, excellent corrosion resistance;

Technical Parameters:

- Power supply:12/24Vdc;
- Rated power:800W;
- Load capacity:350kg;

PATENTED PROCUCT
CE MARKED
EMC TEST APPROVED
CYCLE TEST APPROVED
CLIMATED TEST APPROVED

3D View

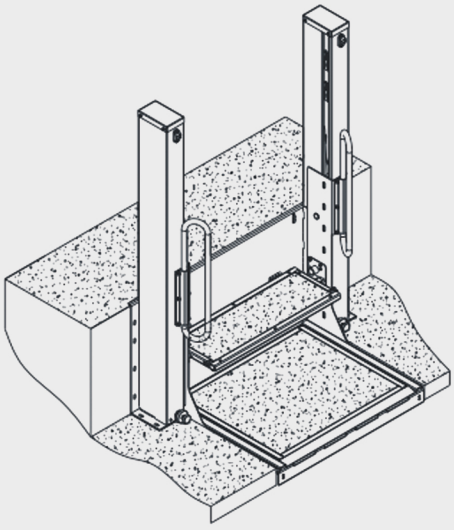

Front View

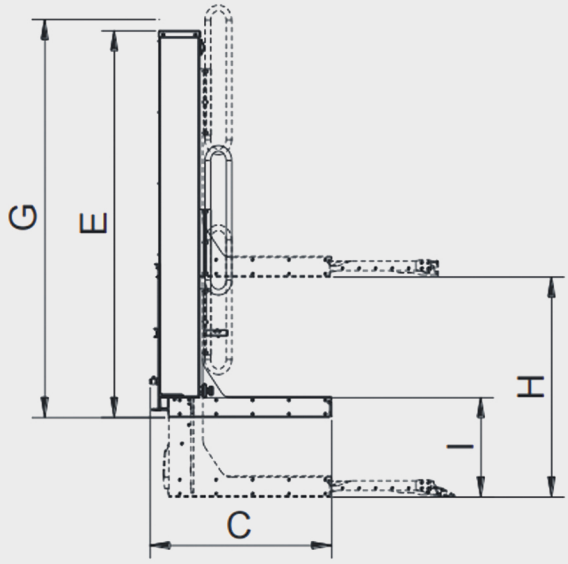

Top View

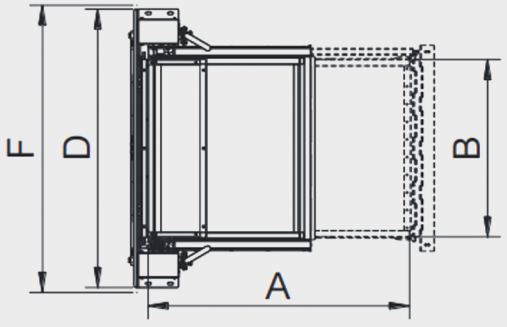

Model Unit: mm	Clear platform length A	Clear platform width B	Length C	Width D	Height E	Min clear door opening width F	Min clear door opening height G	Vertical travel H	Max travel down I
L7A-1200	1200	802	825	1260	1750	1300	1800	1150	450

Wheelchair Lifts

Cassette Wheelchair Lifts- Mini Type

This product is mainly installed under the chassis at the side door of the vehicle. It does not occupy interior space and does not affect the visibility of the driver and passengers. The ultra-thin shell design ensures maximum ground clearance of the vehicle chassis. It can be controlled via a handheld switch or APP.



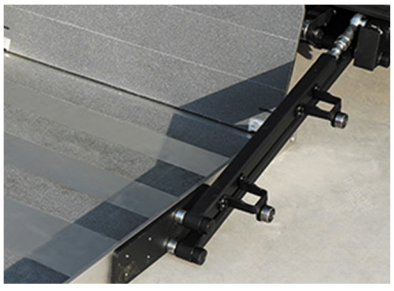



Features:

- Complies with 2006/42/EC,2014/30/EU, ECE R10, EN1756-2, GB13094 standard requirements;
- Ultra-thin shell design;
- Anti-slip platform;
- Continuous buzzer alert during equipment operation;
- Handheld switch control function;
- Equipped with emergency manual function;
- Fully automatic hydraulic drive ensuring stable mechanism operation;
- Automatic mechanical front and rear baffles;
- Product surface with plastic spraying treatment, excellent corrosion resistance;

Technical Parameters:

- Power supply:12/24Vdc;
- Rated power:500W;
- Load capacity:300kg;

CE MARKED

EMC TEST APPROVED

CYCLE TEST APPROVED

CLIMATED TEST APPROVED

Cassette Wheelchair Lifts- Mini Type

Dimensions and models

Front View

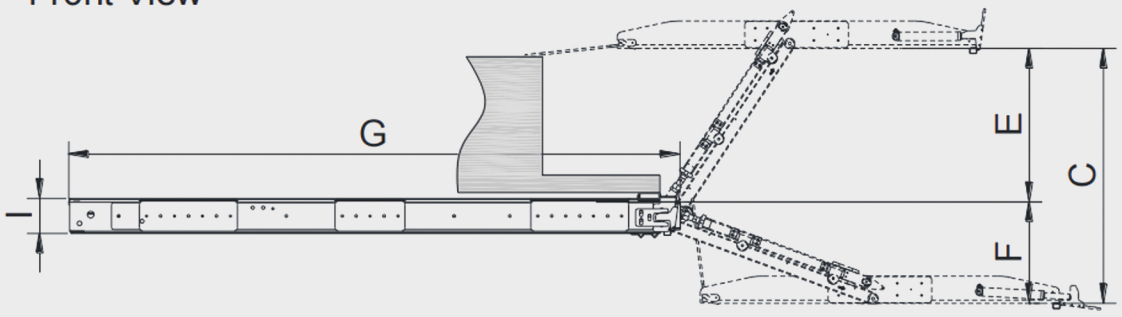

Top View

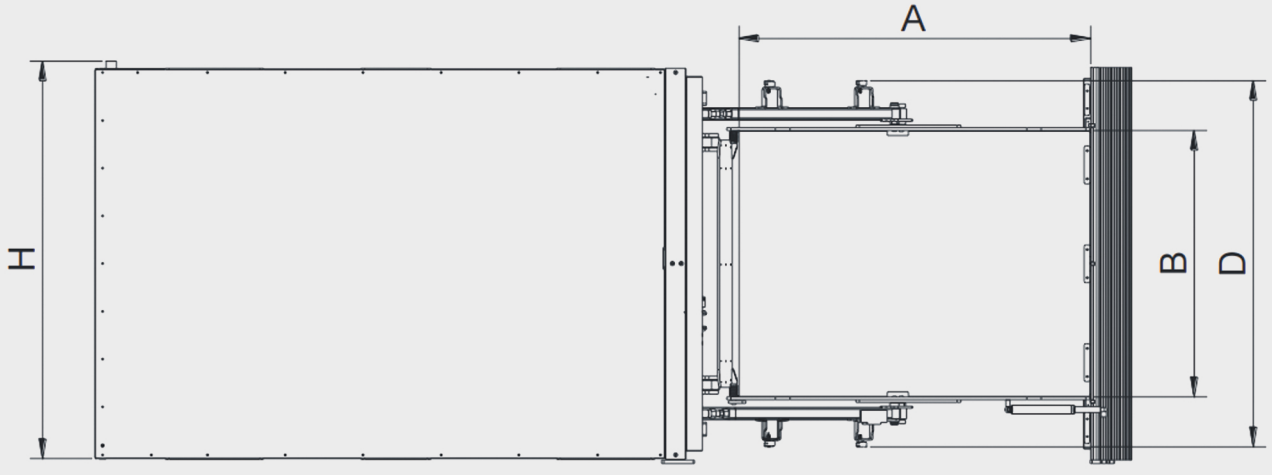

Model	Unit: mm	Clear platform length A	Clear platform width B	Max floor to ground C	Min clear door opening width D	Max travel up E	Max travel down F	Cassette length G	Cassette width H	Cassette height I
L5B1		1005	760	743	1045	423	320	1751	1136	100

CE MARKED

EMC TEST APPROVED

CYCLE TEST APPROVED

CLIMATED TEST APPROVED

Cassette Wheelchair Lifts- Mini Type

Dimensions and models

Front View

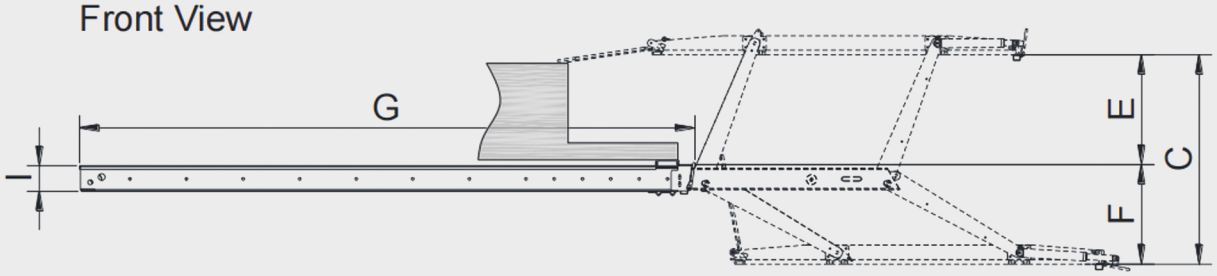

Top View

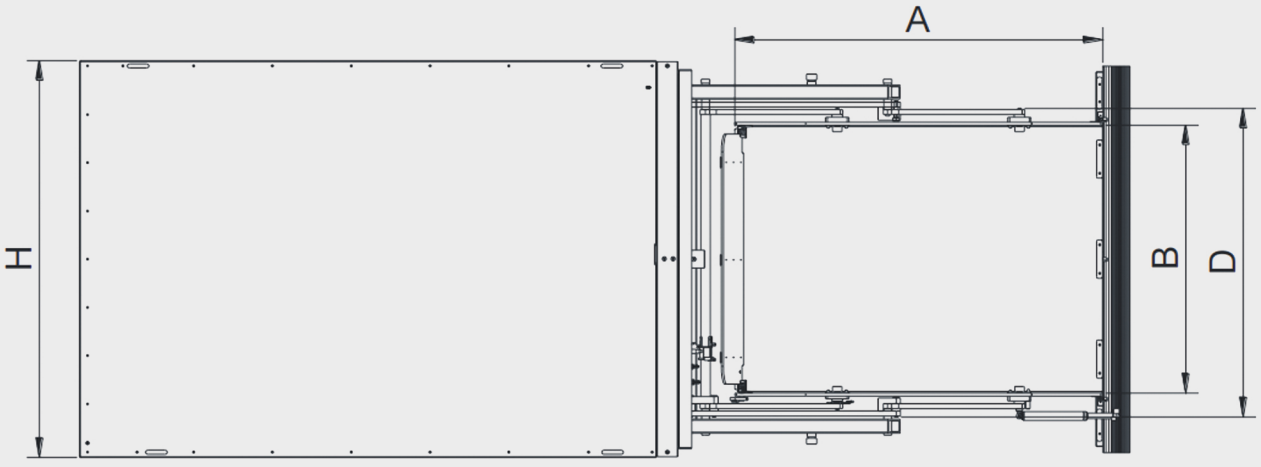

Model	Unit: mm	Clear platform length A	Clear platform width B	Max floor to ground C	Min clear door opening width D	Max travel up E	Max travel down F	Cassette length G	Cassette width H	Cassette height I
L5B2		1040	756	590	864	303	287	1741	1119	74

TENGYUN TECHNOLOGY



The third category | Wheelchair Ramps



Wheelchair Ramps

Wheelchair Ramps

Power Access Ramps-Telescopic and Fold Integrated Type

This product is mainly applicable to urban low-floor buses and, when installed, remains flush with the vehicle floor. It combines a first-level manually reversible access ramp with an electric retractable access ramp, enabling both electric and manual operation. The side beams of the main frame are made of aluminum profiles, paired with load-bearing honeycomb aluminum panels, resulting in a lightweight product with excellent corrosion resistance. Post-installation, it does not affect the chassis's passability and offers superior water, dust, and freeze resistance.

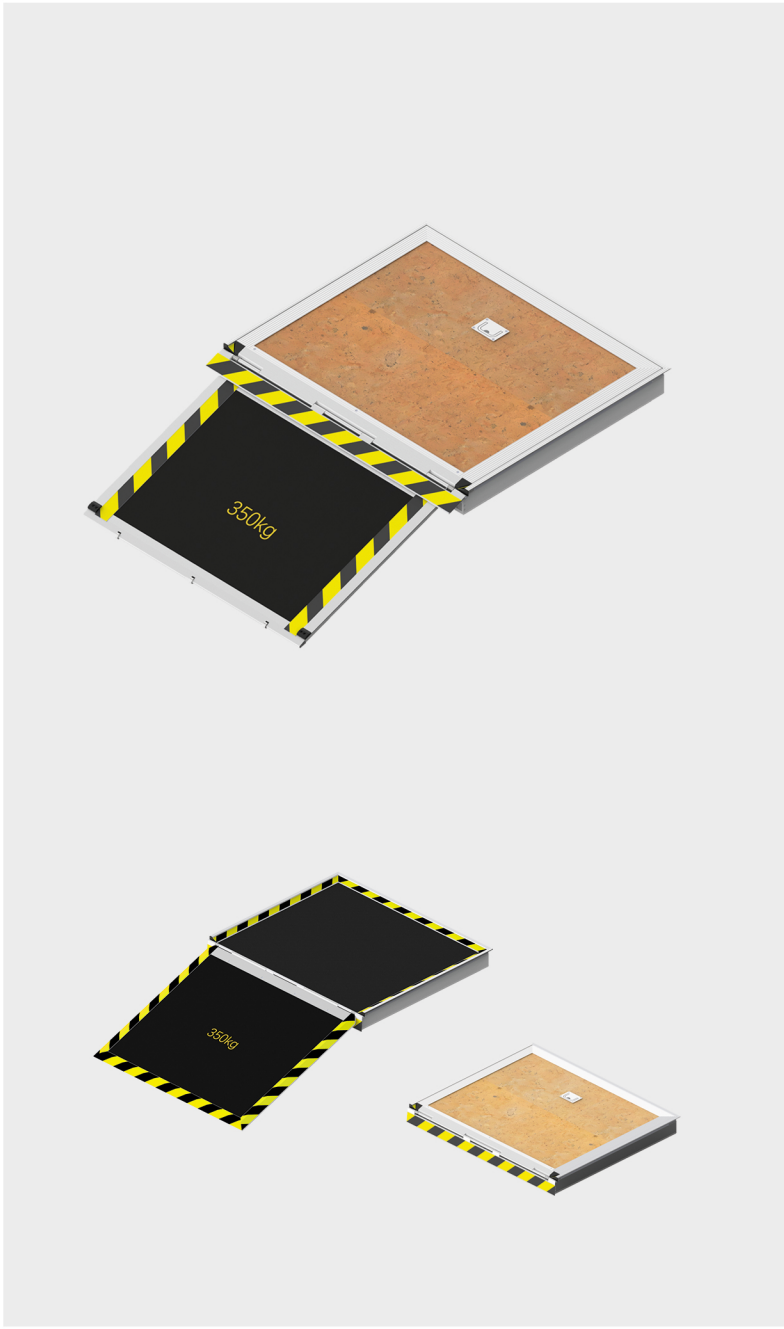

Features:

- Complies with 2006/42/EC,2014/30/EU, ECE R10, GB13094 standard requirements;
- Manual and automatic integrated operation mode;
- Anti-slip platform;
- Continuous buzzer alert during equipment operation;
- Vehicle interlock function;
- Equipped with emergency manual function;
- Obstacle sensing function when the platform is extending;
- 15kg pressure sensing function of the platform (optional);

Technical Parameters:

- Power supply:12/24V;
- Rated power:80W;
- Load capacity:350kg;

Power Access Ramps
-Telescopic and Fold Integrated Type

Dimensions and models

PATENTED PROCUCT
CE MARKED
EMC TEST APPROVED
CYCLE TEST APPROVED
CLIMATED TEST APPROVED

3D View

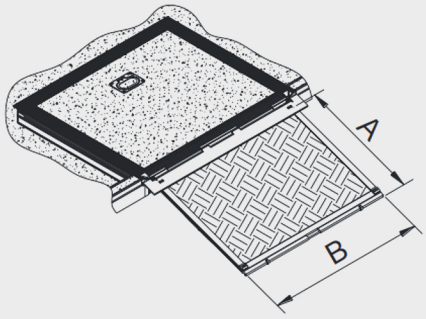

Front View

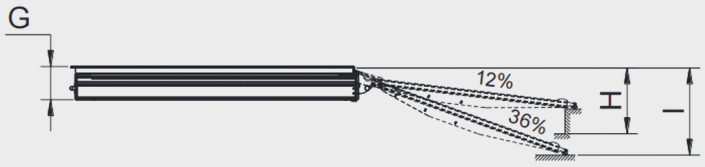

Top View

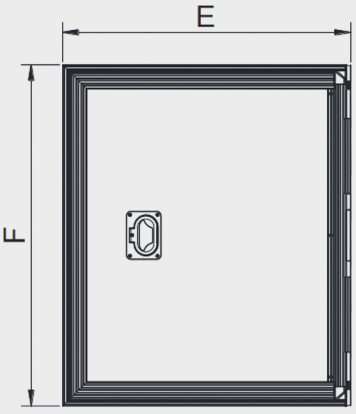

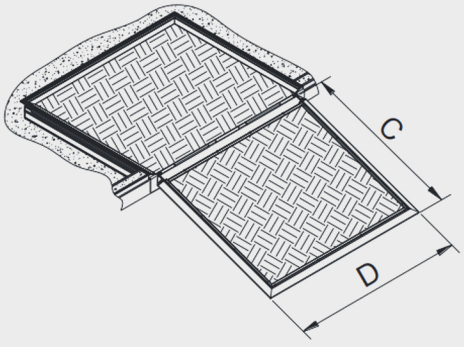

Model Unit: mm	Clear electric platform length A	Clear electric platform width B	Clear manual platform length C	Clear manual platform width D	Length E	Width F	Height G	12% slope max floor to ground	36% slope max floor to ground	Installation size (L*W*H)
PR5A-625×920	625	920	840	1000	875	1036	101	275	265	862×1022×98

Wheelchair Ramps

Power Access Ramps-Two Stage Telescopic Type

This product is mainly applicable to urban low-floor buses, BRTs and other buses with first-step entry. When installed, it is flush with the vehicle floor. The upper cover of the shell adopts a split design, allowing the vehicle to be used normally when the product is disassembled for maintenance due to faults. The side beams of the main frame are made of aluminum profiles, combined with load-bearing honeycomb aluminum panels, resulting in a lightweight product with excellent anti-corrosion performance. After installation, it does not affect the chassis passability and has excellent water, dust and freeze resistance. The product's operation is controlled by the button switch inside the vehicle.



Features:

- Complies with 2006/42/EC,2014/30/EU, ECE R10, GB13094 standard requirements;
- Split design for the shell's upper cover, allowing the vehicle to be used normally after the product is repaired due to faults;
- Anti-slip platform;
- Continuous buzzer alert during equipment operation;
- Vehicle interlock function;
- Equipped with emergency manual function;
- Obstacle sensing function when the platform is extending;
- 15kg pressure sensing function of the platform (optional);

Technical Parameters:

- Power supply:12/24V;
- Rated power:80W;
- Load capacity:350kg;

Power Access Ramps
-Two Stage Telescopic Type

PATENTED PROCUCT
CE MARKED
EMC TEST APPROVED
CYCLE TEST APPROVED
CLIMATED TEST APPROVED

Dimensions and models

Front View

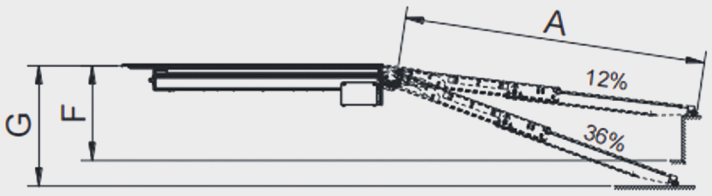

Side View



Top View

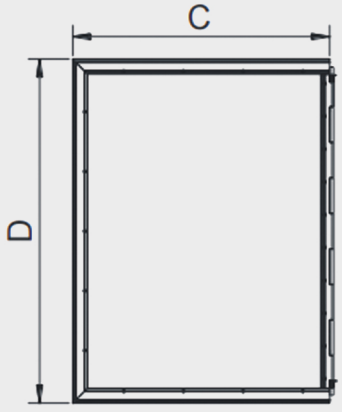

3D View

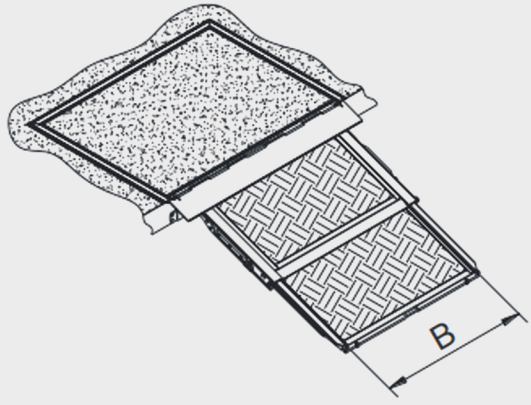

Model Unit: mm	Clear platform length A	Clear platform width B	Length C	Width D	Height E	12% slope max floor to ground F	36% slope max floor to ground G	Installation size (L*W*H)
PR3A-1012×800	1012	800	874	1152	137	326	400	783×996×83

Wheelchair Ramps

Manual Access Ramps-Fold Type

This product is primarily designed for low-floor buses, enabling flush installation with the vehicle floor. The main frame's edge beams are made of aluminum profiles, while the base plate consists of 304 stainless steel combined with load-bearing honeycomb aluminum panels—achieving a lightweight build and excellent corrosion resistance. Installation preserves the chassis's ground clearance and delivers superior water resistance, dust resistance, and freeze resistance. Its manual flipping mechanism ensures smooth, hassle-free operation.

The access ramp's length and width can be customized to match vehicle dimensions.

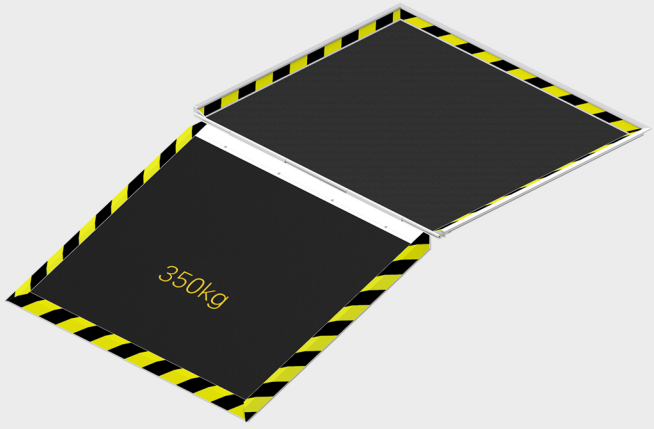

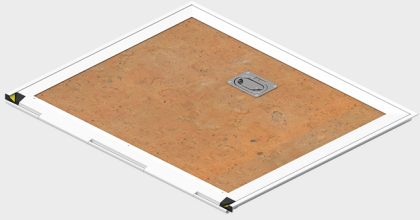

Features:

•Complies with 2006/42/EC, GB13094 standard requirements;
•Anti-slip platform;
•Vehicle interlock function;
•Ergonomically designed large pull ring;

Technical Parameters:'

•Load capacity:350kg;

3D View

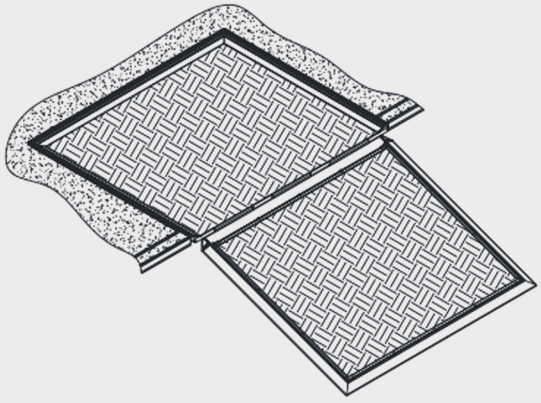

Front View



Top View

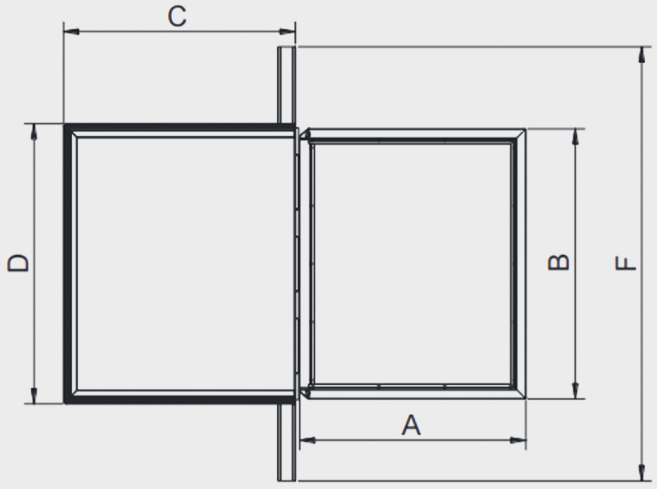

Model Unit: mm	A (Clear platform length)	B (Clear platform width)	C (Length)	D (Width)	E (Height)	F (Width including edge trim strip)
MR3A-700×1000	700	1000	721	1037	24	1605
MR3A-750×1000	750	1000	771	1037	24	1605
MR3A-800×1000	800	1000	821	1037	24	1605

Wheelchair Ramps

Manual Access Ramps-Multiple Fold Type

This product is mainly installed at the tailgate of commercial vehicles. Gas springs and handles are fitted on both sides of the access ramp, making it easier and less labor-intensive to open and stow the access ramp. When not in use, the access ramp stands upright inside the vehicle after being stowed, taking up little interior space.

This access ramp is available in two-fold and three-fold options.



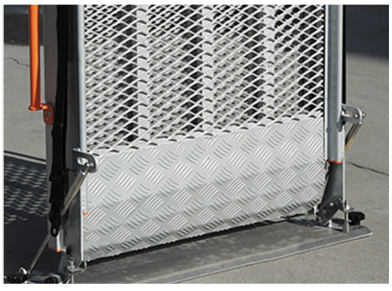



Features:

- Complies with 2006/42/EC standard requirements;
- Main side beams are aluminum profiles, lighter in weight;
- Reticulated anti-slip platform;
- No abnormal noise from the access ramp when the vehicle is moving;
- Large handle design for easier operation;
- Gas spring-assisted storage, making opening and folding more labor-saving;

Technical Parameters:

- Load capacity:350kg;

3D View

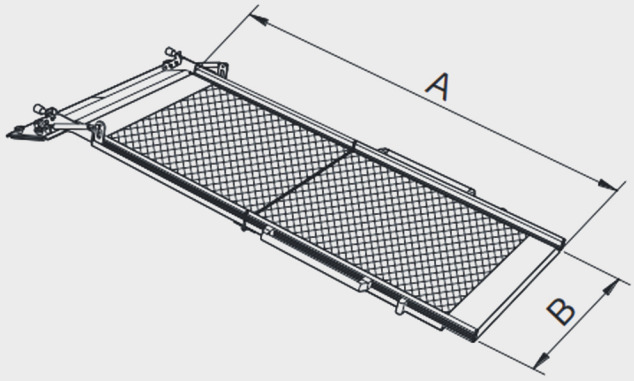

Usage State

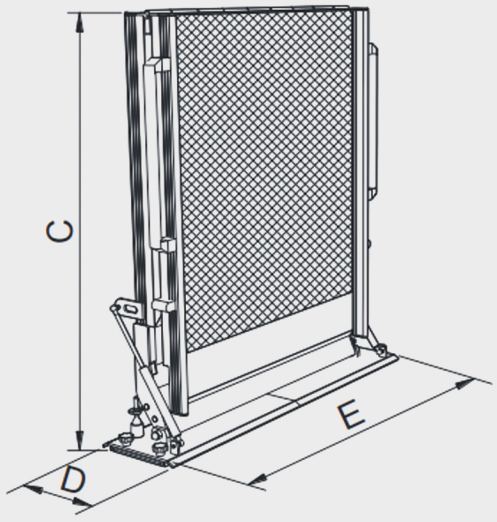

Stowed State

Model Unit: mm	Length A	Inside width B	Height folded C	Overall depth D	Overall width E	Unit weight	Type
MR5A-2000×820	2000	820	1150	230	1060	32kg	Double fold
MR5A-2400×820	2400	820	1350	230	1060	36kg	Double fold
MR5A-2800×820	2800	820	1550	230	1060	41kg	Double fold
MR5B-2000×820	2000	820	820	230	1060	35kg	Triple fold
MR5B-2400×820	2400	820	950	230	1060	40kg	Triple fold
MR5B-2800×820	2800	820	1080	230	1060	45kg	Triple fold

TENGYUN TECHNOLOGY



The fourth category | Wheelchair Aids



Wheelchair Aids

www.tengyun-mobility.com

Wheelchair Aids

Wheelchair Restraint System

The wheelchair restraint system is a four-point type fixed to the vehicle floor at the front and rear of the wheelchair. It is connected to the wheelchair frame via traction belt hooks, which can automatically adjust and tighten to secure the wheelchair inside the vehicle. This ensures the safety of wheelchair passengers in the event of a vehicle collision or sudden braking.



RS3A Rail Embedded Restraint System

A slot needs to be made in the vehicle floor for the fixed track to be installed in a recessed manner, resulting in an aesthetically pleasing overall installation that does not impede passage.

Features:

- Passed ISO10542-1:2012 dynamic impact test;
- When fully retracted, the traction belt can be pulled out with one hand;
- Dual knobs on both sides of the tractor for easy adjustment and tightening of the traction belt;
- Equipped with a two-point safety belt; no additional drilling for fixation;
- Recessed tracks with rubber gaskets prevent dust ingress and stepping hazards when not in use;
- Three-point safety belt available as an option;



Two-point safety belt (standard)



Standard three-point safety belt (optional)



Luxury three-point safety belt (optional)

Configuration List:

- Wheelchair retractor×4;
- Recessed track×4;
- Fastening standard parts×1;
- Two-point safety belt × 1 (standard);
- Standard three-point safety belt × 1 (optional);
- Luxury three-point safety belt × 1 (optional);

Wheelchair Restraint System

CRASH TEST APPROVED



RS5A Disc Fixed Restraint System

The disc is fixed to the vehicle floor at a single point, featuring 360° rotation and small space occupation.

Features:

- Passed ISO10542-1:2012 dynamic impact test;
- When fully retracted, the traction belt can be pulled out with one hand;
- Dual knobs on both sides of the tractor for easy adjustment and tightening of the traction belt;
- Equipped with a two-point safety belt; no additional drilling for fixation;
- Recessed tracks with rubber gaskets prevent dust ingress and stepping hazards when not in use;
- Three-point safety belt available as an option;



Two-point safety belt (standard)



Standard three-point safety belt (optional)



Luxury three-point safety belt (optional)

Configuration List:
- Wheelchair retractor×4;
- Disc fixator×4;
- Fastening standard parts×1;
- Two-point safety belt × 1 (standard);
- Standard three-point safety belt × 1 (optional);
- Luxury three-point safety belt × 1

Wheelchair Aids

Wheelchair Winch

This product is mainly a device that provides assistance when a wheelchair moves up and down via a access ramp. It offers stable traction when the wheelchair climbs up the vehicle and provides continuous braking force when the wheelchair descends.



Features:

•Complies with 2006/42/EC, 2014/30/EU, ECE R10, standard requirements;
•Smooth operation with low noise;
•Instant on/off operation;
•Equipped with wireless remote control;
•Smaller size, compatible with more vehicle models;





Technical Parameters:

•Power supply:12Vdc;
•Traction force:14°,1250N;
•Webbing length:≤4500mm;
•Operating noise:≤60dB;

CE MARKED

EMC TEST APPROVED

CYCLE TEST APPROVED

CLIMATED TEST APPROVED

Front View

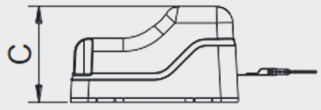

3D View

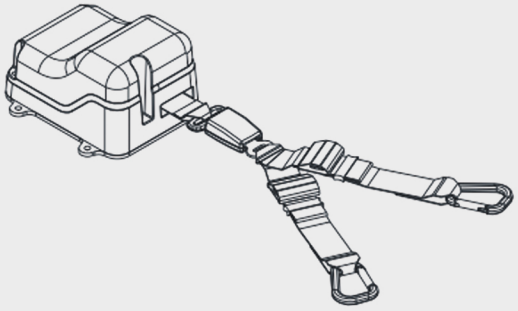

Top View

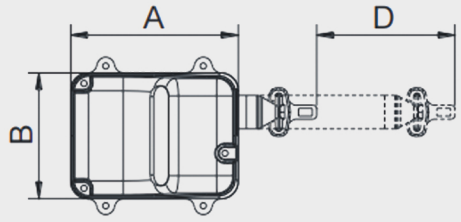

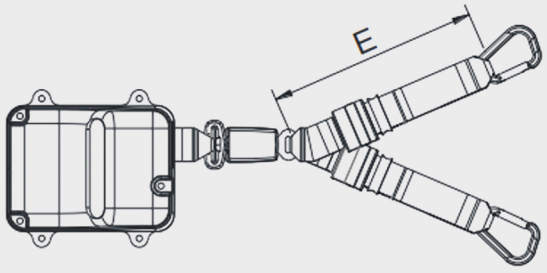

Model	Unit: mm	Length A	Width B	Height C	Webbing extendable length D	Trident webbing adjustable length D
WW3A		240	180	137	<4500	250~530

Wheelchair Aids

Wheelchair Roof Top Box

This product can conveniently store foldable wheelchairs in the roof cover. It is mainly used for self-driving vehicles for the disabled and is compatible with most vehicle models on the market. Drivers can independently store the wheelchair by operating the wireless remote control without leaving the driver's seat.

Available in left-swivel and right-swivel models



Features:

- Enables safe and reliable installation with various on-market car roof racks;
- Powered by the vehicle’ s own cigarette lighter socket or trunk power plug – simply plug in for use and unplug when not in use, no vehicle circuit modification required;
- Seamless connection between outer cabinet’ s top cover and base, with sealing strip for waterproof/dustproof protection; stable during normal driving;
- Lifting and lowering are button-controlled. When retracting or lowering with one click, the mechanism emits a beep to alert nearby personnel and prevent accidents;
- All moving mechanisms have limit switches for positioning/protection; software limiting included to avoid motor stalling and component damage after reaching position;
- Easy installation/disassembly – no professional knowledge required, achievable via instruction manual;
- Auto-retracts/deploys wheelchair without assistance, convenient for disabled drivers and caregivers (eliminates repeated carrying);





Technical Parameters:

- Power supply: DC12V, 10A;
- Operating time: Storage ≤50s, Retrieval 45s, No-load/load error ±2s;
- Net weight:≤50kg;
- Load capacity:28kg;

PATENTED PROCUCT

EMC TEST APPROVED

CYCLE TEST APPROVED

Wheelchair Roof Top Box

Dimensions and models

Front View

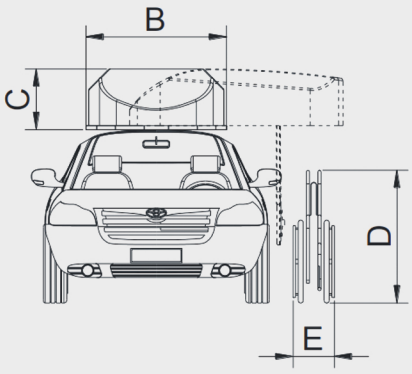

Side View

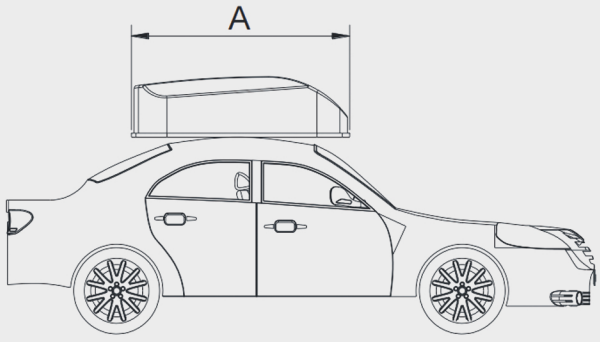

Model Unit: mm	Length A	Width B	Height C	Max height of folding wheelchair D	Max thickness of folding wheelchair E
WS3AR	1630	1070	450	900	330
WS3AL	1630	1070	450	900	330

Wheelchair Aids

Wheelchair Hoist

This wheelchair hoist is mainly installed in the boot door of SUV, MPV and other vehicle models, making it convenient for users to fold their wheelchairs and store them in the boot door. The product is easy to install and operate. It can be controlled via a handheld switch, a mobile phone APP or Bluetooth connection. When operating the product, point control is adopted. After releasing the button, the product can stop at any lifting or swiveling position. Press the button and the hoist will start automatically. It can be quickly disassembled when not in use to save the space.

Available in left-swivel and right-swivel models.







Features:

•Complies with 2006/42/EC, 2014/30/EU, ECE R10, standard requirements;
•Smooth operation with low noise;
•Easy to disassemble function, saving space;
•Equipped with wireless remote control;

Technical Parameters:

•Power supply:12Vdc;
•Rated power:150W;
•Load capacity:100kg;
•Maximum vertical travel:858mm;
•Product Weight:22kg;

Front View

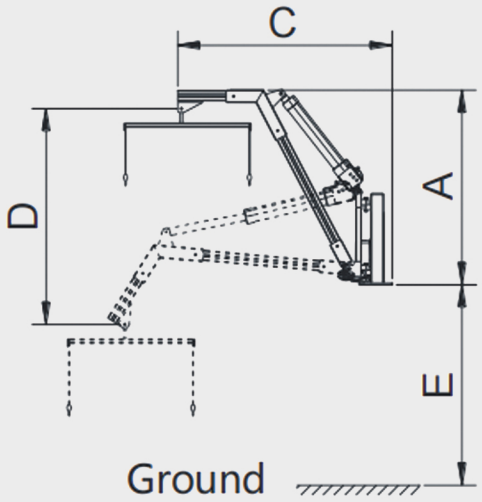

Top View

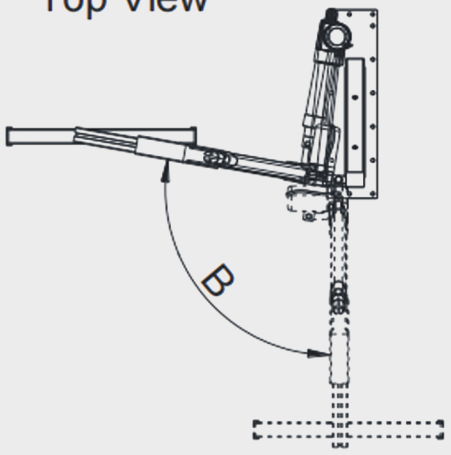

Model Unit: mm	Height A	Swivel range B	adjustable length C	Vertical travel D	Max floor to ground D
WH3AR	840~885	0~100°	760~830	858~910	750
WH3AL	840~885	0~100°	760~830	858~910	750

TENGYUN TECHNOLOGY



The fifth category | Driving Aids

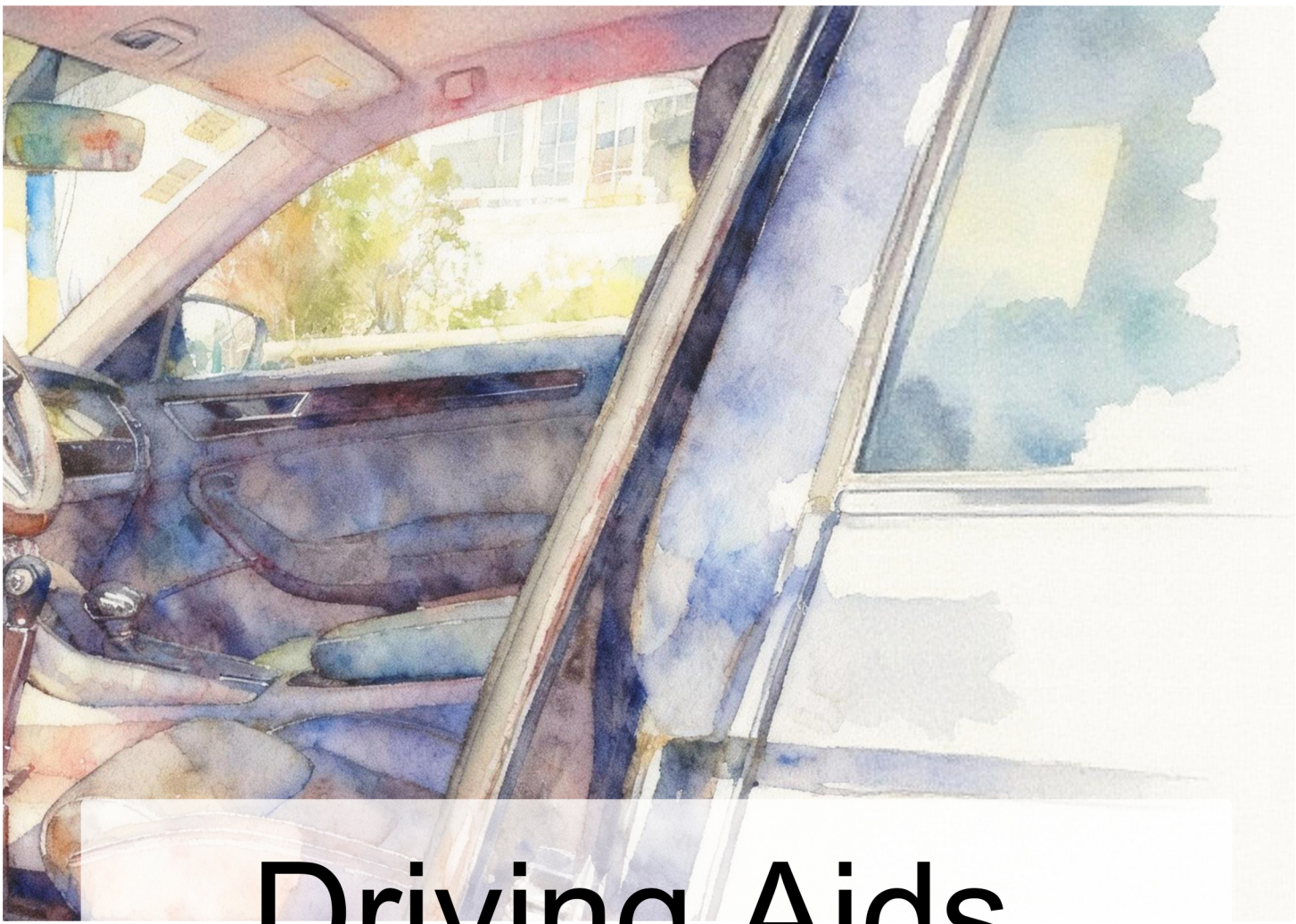

Driving Aids

Driving Aids

Seat Side Panel

An innovative transfer board designed to assist people with limited mobility in getting in and out of vehicles. It has a simple structure, ensures safety and reliability, and is applicable to various vehicle types. It can be mounted on both the passenger side and driver side.



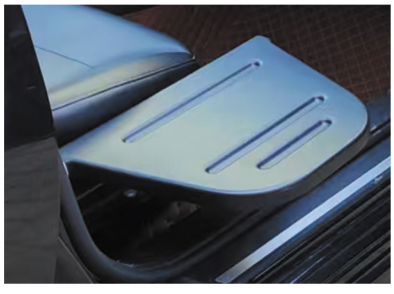



Features:

- Fixed using original seat anchors, no structural modifications to the vehicle required;
- After storage, it integrates perfectly with the vehicle interior, featuring an elegant appearance and easy operation;
- No abnormal noise from the product when the vehicle is moving;
- Product surface with plastic spraying treatment, excellent corrosion resistance;

Technical Parameters:

- Overall dimensions: 450mm (L) × 269mm (W) × 239mm (H);
- Product net weight: 7.5kg;
- Load capacity: 100kg;

CE MARKED

Front View

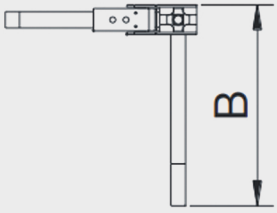

Side View

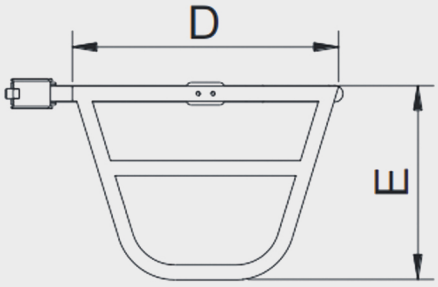

Top View

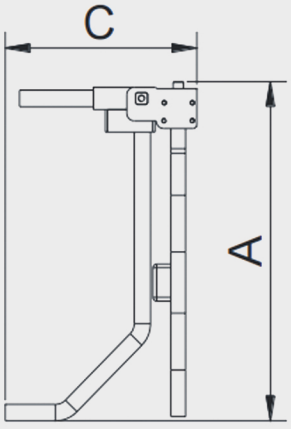

3D View

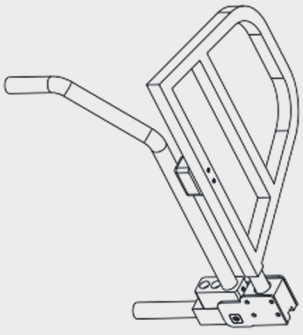

Usage State

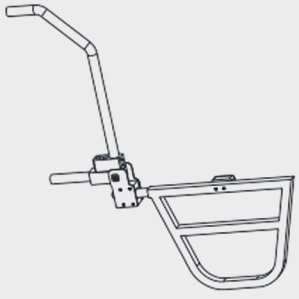

Stowed State

Model	Unit: mm	Length A	Width B	Height C	Seat width D	Seat depth E
SSP3R		467	285	240	360	280
SSP3L		467	285	240	360	280

Driving Aids

CE MARKED

Hand Control For Accelerator And Brake

This device is installed on automatic-transmission vehicles, allowing physically disabled individuals to drive independently with ease. Specifically suitable for those with right lower limb or bilateral lower limb disabilities.





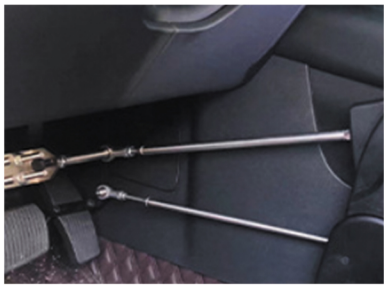

Product Model:HC5A

Features:

- Fixed via seat rails, no drilling, no damage to the vehicle body;
- Modular design, all components replaceable independently;
- Humanized design, allowing comfortable adjustment for different users or vehicle models;
- Easy to install and disassemble;
- Safe and reliable brake and accelerator connection points;
- Smooth and labor-saving driving operation;

TENGYUN TECHNOLOGY



The sixth category | Steps

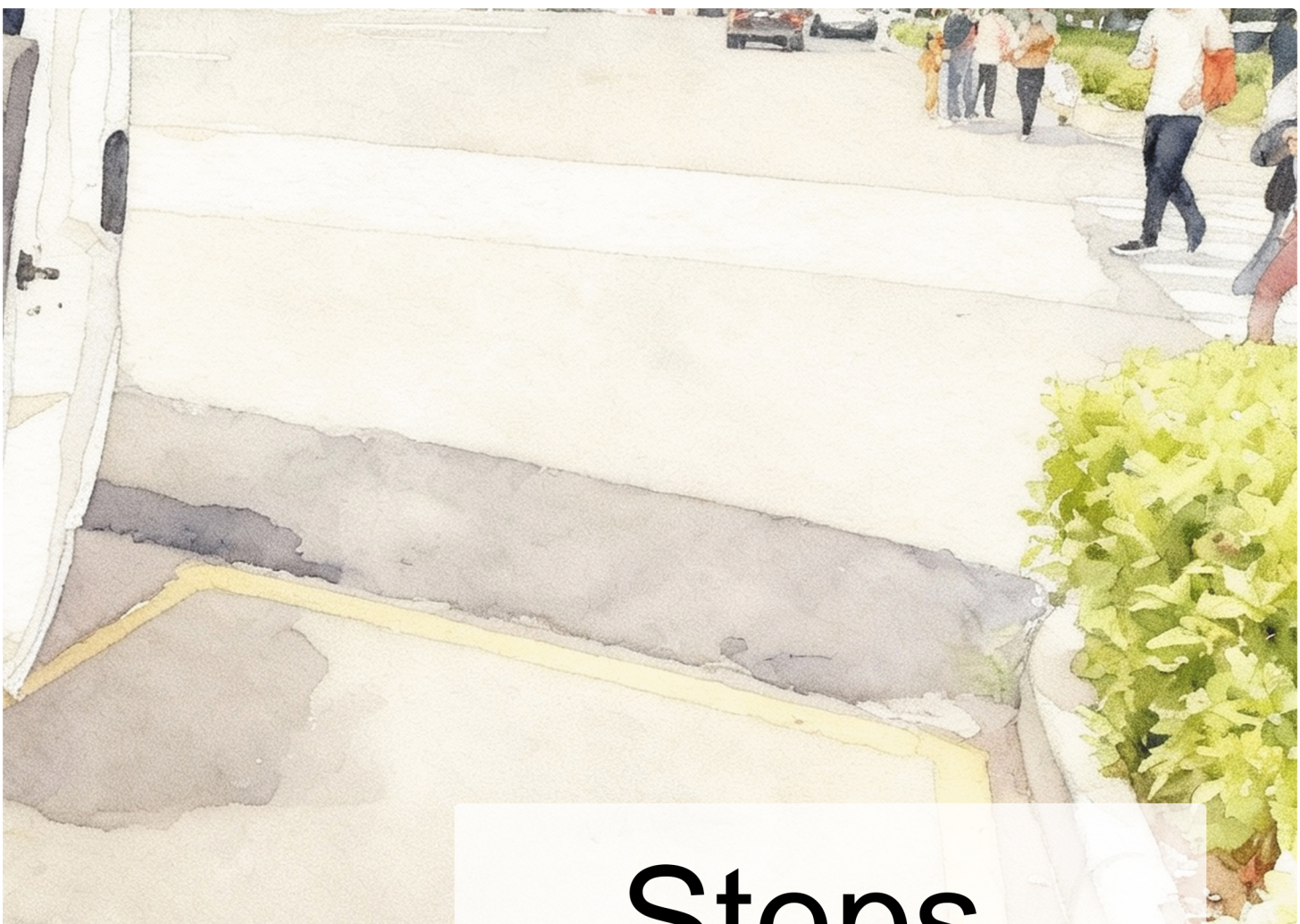

Steps

Steps

Electric Steps

This product is mainly installed under the side door steps of commercial vehicles, school buses, RVs, ambulances, etc., to facilitate passengers' entry and exit. The step frame and pedals are made of full aluminum profiles, featuring light weight, high strength and superior corrosion resistance. The enclosed guide structure ensures the steps run smoothly without being affected by rain or sediment even in harsh environments. The specially designed manual emergency retraction mechanism allows easy tool-free pedal retraction in case of machine failure.

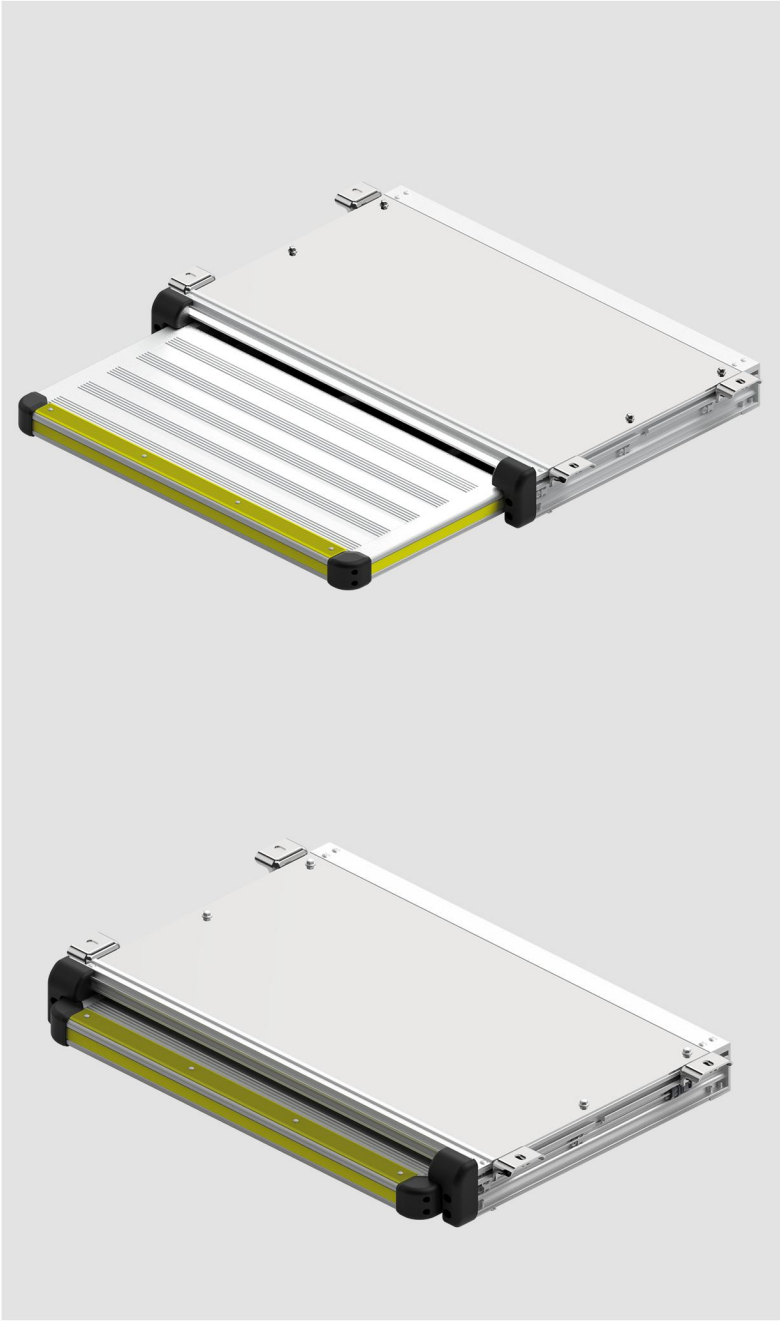

Features:

- Complies with 2006/42/EC, 2014/30/EU, ECE R10, GB15083 standard requirements;
- Tool-free manual emergency retraction function;
- Enclosed guide structure, effectively reducing rain and sediment impact on the drive mechanism;
- Door interlock function;
- Automatic stop when encountering obstacles;
- Step automatically enters sleep mode within 10 seconds at retracted position;
- EU E-MARK certification;
- Quiescent current < 0.1mA;
- Compatible with vehicle CAN bus;

Technical Parameters:

- Power supply:12/24Vdc;
- Rated power:30W;
- Load capacity:250kg;

PATENTED PROCUCT
CE MARKED
EMC TEST APPROVED
CYCLE TEST APPROVED
CLIMATED TEST APPROVED

3D View

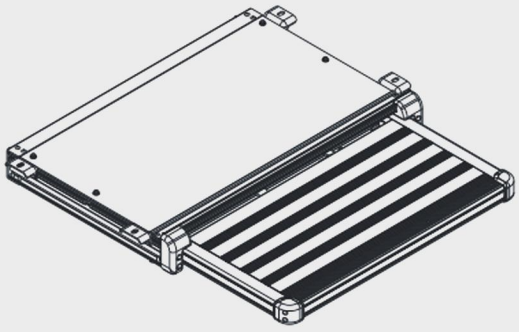

Front View

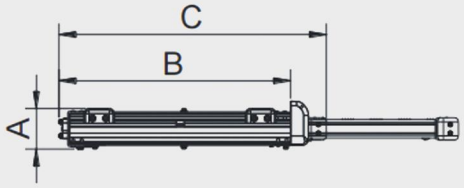

Top View

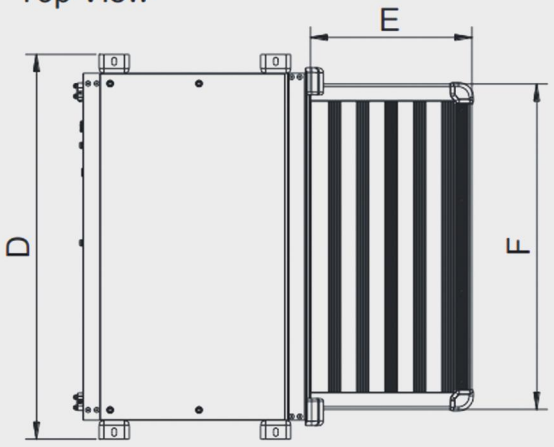

Model Unit: mm	Height A	Length B	Total length C	Total width D	Step width E	Step length F	Unit weight
SEF-500×235	74	365	433	610	235	500	9kg
SEF-600×300	74	430	498	710	300	600	12kg
SEF-750×300	74	430	498	860	300	750	16kg
SEF-900×300	74	430	498	1010	300	900	18kg
SEF-1200×300	74	430	498	1310	300	1200	21kg

TENGYUN TECHNOLOGY



The seventh category | Medical Aids



Medical Aids

www.tengyun-mobility.com

Medical Aids

Occupancy Seat sensor pad And Wet Sensor pad

EU RoHS Environmental Certification

CE MARKED

EMC TEST APPROVED

This innovative sensor pad system consists of two components: an occupancy seat sensor pad SP3 and a wet sensor pad SP5. They can be used together or separately to meet different needs. The occupancy seat sensor pad accurately detects human occupancy and recognizes children, while the wet sensor pad is designed for liquid detection. It keeps working even if ripped or teared. The units may be installed and commissioned only by skilled and correspondingly qualified personnel.

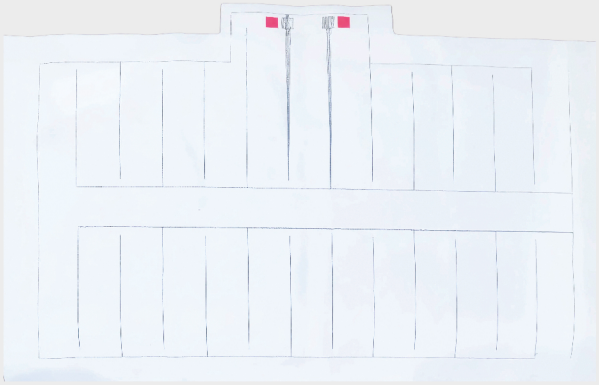

Technical Parameters:

- Complies with 2006/42/EC, 2014/30/EU, GB 9706,YY 9706.102,ROHS,SAFETY standard requirements;
- Input voltage: 5V (Occupancy Seat sensor pad), 18V~35V (Wet Sensor pad);
- Output current: 0.5A;
- Pad dimensions: 450×750mm;
- Alarm sound: Buzzer;
- Compatible with our existing systems (e.g., MC220, MC222,MC224)

Medical Aids

Patient Transfer Lift

EU RoHS Environmental Certification

CE MARKED

EMC TEST APPROVED

This is a medical patient lift to help mobility-limited (individuals elderly, disabled, paralyzed, or bedridden) with daily tasks like getting up, toileting, repositioning, and outdoor movement. It safely transfers critically ill patients for bed shifts or other needs, reducing injury risks.







Features:

- Complies with 2006/42/EC, 2014/30/EU, GB 9706,YY 9706.102,ROHS,SAFETY standard requirements;
- Dual-motor system: One motor for lifting patients, the other for extending the support base, ensuring smooth and stable operation;
- Compact and robust structure: Equipped with the classic MD120 motor, with a maximum load capacity of 200kg;
- Manual reset (CPR) function: Enables safe and controlled lowering of patients in case of power failure or low battery;
- Advanced integrated power and control system: Built-in 3900mAh battery, supporting up to 176 hours of continuous operation;

Technical Parameters:

- Power supply:220V;
- Working current:≤5.5A;
- Load capacity:200kg;
- Empty speed:16mm/s;
- Noise:≤50dB;
- Stroke:350mm;
- Material: Stainless steel;
- Dimensions:850*700*1350mm;



-To Be The Global Leader Of Mobility Solution-

Company Name: Changzhou Tengyun Technology Co., LTD
Address: No. 6, Beitanghe East Road, Tianning District, Changzhou City, Jiangsu Province
Tel：13915845339
E-mail：info@tengyun-mobility.com
Web：www.tengyun-mobility.com